TOSHIBA

FILE NO. 050-200543GR
(MFR'S VERSION A)

SERVICE MANUAL

COLOR TELEVISION

27DF46

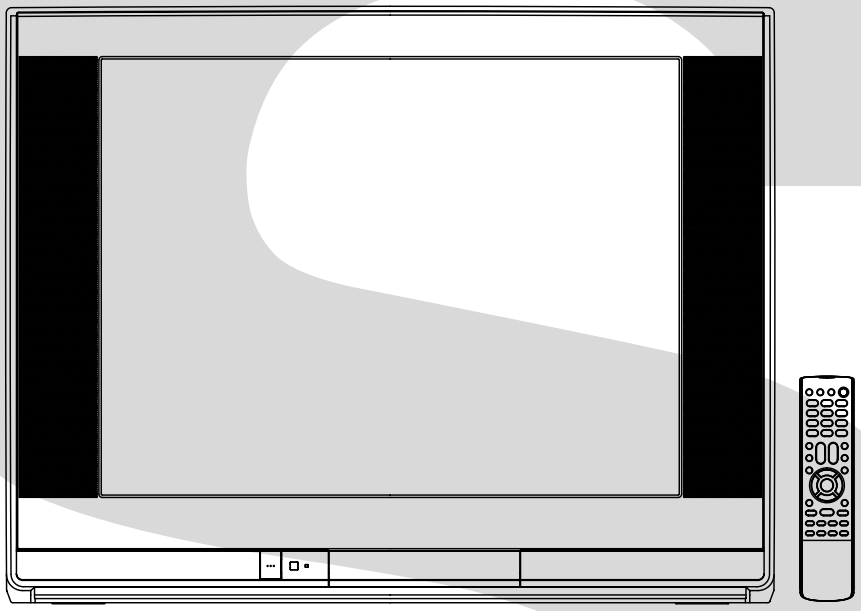

The above model is classified as a green product (*1), as indicated by the underlined serial number. This Service Manual describes replacement parts for the green product. When repairing this green product, use the part(s) described in this manual and lead-free solder (*2).

For (*1) and (*2), see the next page.

DOCUMENT CREATED IN JAPAN, February, 2006 GREEN

(*1) GREEN PRODUCT PROCUREMENT

The EC is actively promoting the WEEE & RoHS Directives that define standards for recycling and reuse of Waste Electrical and Electronic Equipment and for the Restriction of the use of certain Hazardous Substances. From July 1, 2006, the RoHS Directive will prohibit any marketing of new products containing the restricted substances.

Increasing attention is given to issues related to the global environmental. Toshiba Corporation recognizes environmental protection as a key management tasks, and is doing its utmost to enhance and improve the quality and scope of its environmental activities. In line with this, Toshiba proactively promotes Green Procurement, and seeks to purchase and use products, parts and materials that have low environmental impacts.

Green procurement of parts is not only confined to manufacture. The same green parts used in manufacture must also be used as replacement parts.

(*2) LEAD-FREE SOLDER

This product is manufactured using lead-free solder as a part of a movement within the consumer products industry at large to be environmentally responsible. Lead-free solder must be used in the servicing and repair of this product.

WARNING

This product is manufactured using lead free solder.

DO NOT USE LEAD BASED SOLDER TO REPAIR THIS PRODUCT !

The melting temperature of lead-free solder is higher than that of leaded solder by 86°F to 104°F (30°C to 40°C). Use of a soldering iron designed for lead-based solders to repair product made with lead-free solder may result in damage to the component and or PCB being soldered. Great care should be made to ensure high-quality soldering when servicing this product — especially when soldering large components, through-hole pins, and on PCBs — as the level of heat required to melt lead-free solder is high.

SERVICING NOTICES ON CHECKING

1. KEEP THE NOTICES

As for the places which need special attentions, they are indicated with the labels or seals on the cabinet, chassis and parts. Make sure to keep the indications and notices in the operation manual.

2. AVOID AN ELECTRIC SHOCK

There is a high voltage part inside. Avoid an electric shock while the electric current is flowing.

3. USE THE DESIGNATED PARTS

The parts in this equipment have the specific characters of incombustibility and withstand voltage for safety. Therefore, the part which is replaced should be used the part which has the same character.
Especially as to the important parts for safety which is indicated in the circuit diagram or the table of parts as a ⚠ mark, the designated parts must be used.

4. PUT PARTS AND WIRES IN THE ORIGINAL POSITION AFTER ASSEMBLING OR WIRING

There are parts which use the insulation material such as a tube or tape for safety, or which are assembled in the condition that these do not contact with the printed board. The inside wiring is designed not to get closer to the pyrogenic parts and high voltage parts. Therefore, put these parts in the original positions.

5. TAKE CARE TO DEAL WITH THE CATHODE-RAY TUBE

In the condition that an explosion-proof cathode-ray tube is set in this equipment, safety is secured against implosion. However, when removing it or serving from backward, it is dangerous to give a shock. Take enough care to deal with it.

6. AVOID AN X-RAY

Safety is secured against an X-ray by considering about the cathode-ray tube and the high voltage peripheral circuit, etc.
Therefore, when repairing the high voltage peripheral circuit, use the designated parts and make sure not modify the circuit.
Repairing except indicates causes rising of high voltage, and it emits an X-ray from the cathode-ray tube.

7. PERFORM A SAFETY CHECK AFTER SERVICING

Confirm that the screws, parts and wiring which were removed in order to service are put in the original positions, or whether there are the portions which are deteriorated around the serviced places serviced or not. Check the insulation between the antenna terminal or external metal and the AC cord plug blades. And be sure the safety of that.

(INSULATION CHECK PROCEDURE)

1. Unplug the plug from the AC outlet.
2. Remove the antenna terminal on TV and turn on the TV.
3. Insulation resistance between the cord plug terminals and the eternal exposure metal **[Note 2]** should be more than 1M ohm by using the 500V insulation resistance meter **[Note 1]**.
4. If the insulation resistance is less than 1M ohm, the inspection repair should be required.

[Note 1]

If you have not the 500V insulation resistance meter, use a Tester.

[Note 2]

External exposure metal: Antenna terminal
Headphone jack

HOW TO ORDER PARTS

Please include the following informations when you order parts. (Particularly the VERSION LETTER.)

1. MODEL NUMBER and VERSION LETTER
   The MODEL NUMBER can be found on the back of each product and the VERSION LETTER can be found at the end of the SERIAL NUMBER.
2. PART NO. and DESCRIPTION
   You can find it in your SERVICE MANUAL.

IMPORTANT

When you exchange IC and Transistor with a heat sink, apply silicon grease on the contact section of the heat sink. Befor applying new silicon grease, remove all the old silicon grease. (Old grease may cause damages to the IC and Transistor.)

TABLE OF CONTENTS

GREEN PRODUCT PROCUREMENT A1-1
LEAD-FREE SOLDER A1-1
SERVICING NOTICES ON CHECKING A1-2
HOW TO ORDER PARTS A1-2
IMPORTANT A1-2
TABLE OF CONTENTS A2-1
GENERAL SPECIFICATIONS ..... A3-1~A3-5
DISASSEMBLY INSTRUCTIONS
1. REMOVAL OF ANODE CAP B1-1
2. REMOVAL AND INSTALLATION OF FLAT PACKAGE IC B2-1, B2-2
SERVICE MODE LIST C-1
WHEN REPLACING EEPROM (MEMORY) IC C-1, C-2
RE-WRITE FOR DIGITAL SOFT FIRMWARE C-3
ELECTRICAL ADJUSTMENTS ..... D-1~D-6
BLOCK DIAGRAMS
MICON/CHROMA E-1, E-2
SD DIGITAL MODULE E-3, E-4
PRINTED CIRCUIT BOARDS
MAIN ..... F-1~F-4
CRT/VM COIL/DIGITAL F-5, F-6
SCHEMATIC DIAGRAMS
MICON G-1, G-2
CHROMA G-3, G-4
DEFLECTION G-5, G-6
POWER G-7, G-8
TUNER G-9, G-10
AV/SW/SOUND AMP/TONE CTL G-11, G-12
COMB FILTER G-13, G-14
ASIC G-15, G-16
SDRAM G-17, G-18
FLASH G-19, G-20
FRONT END G-21, G-22
AV OUT G-23, G-24
CRT/SVM G-25, G-26
INTERCONNECTION DIAGRAM G-27, G-28
WAVEFORMS H-1, H-2
MECHANICAL EXPLODED VIEWS I-1, I-2
MECHANICAL REPLACEMENT PARTS LIST J1-1
ELECTRICAL REPLACEMENT PARTS LIST ..... J2-1~J2-6

GENERAL SPECIFICATIONS

G-1	**TV System**	CRT	CRT Size / Visual Size	27 inch / 676.0mmV
			CRT Type	Flat
			Magnetic Field BV/BH	+0.45G/0.18G
		Color System		NTSC
		Speaker		2 Speaker
			Position	Front Side
			Size	2.0 x 4.7 Inch
			Impedance	8 ohm
		Sound Output	MAX	2.5+2.5 W
			10%(Typical)	- W
		NTSC3.58+4.43 /PAL60Hz		No
G-2	**Tuning System**	Broadcasting System	Analog	US System M
			Digital	ATSC(8VSB), QAM
		Tuner and Receive CH	System	1Tuner
			Destination	USA(W/ CATV)
			Tuning System	F-Synth
			Input Impedance	VHF/UHF 75 ohm
			CH Coverage	2 - 69, 4A, A-5 - A-1, A - I, J - W, W+1 - W+84
		Intermediate Frequency	Digital	44.00MHz
			Analog Picture(FP)	45.75MHz
			Sound(FS)	41.25MHz
			FP-FS	4.50MHz
		Preset CH		No
		Stereo/Dual TV Sound		Yes
		Tuner Sound Muting		Yes
G-3	**Power**	Power Source	AC	120V AC 60Hz
			DC	
		Power Consumption	at AC	
				140 W at AC 120 V 60 Hz
			Stand by (at AC)	3 W at AC 120 V 60 Hz
			Per Year	-- kWh/Year
		Protector	Power Fuse	Yes
			Safety Circuit	Yes
			IC Protector(Micro Fuse)	No
G-4	**Regulation**		Safety	UL
			Radiation	FCC
			X-Radiation	DHHS
G-5	**Temperature**		Operation	+5oC ~ +40oC
			Storage	-20oC ~ +60oC
G-6	**Operating Humidity**			Less than 80% RH

GENERAL SPECIFICATIONS

G-7	**On Screen Display**	Menu		Yes	
		Menu Type		Icon	
		Picture		Yes	
			Mode(Picture preference)		No
			Contrast	Yes	
			Brightness	Yes	
			Color	Yes	
			Tint	Yes	
			Sharpness	Yes	
			Color Temperature		No
			Reset	Yes	
		Sound		Yes	
			MTS	Yes	
			Bass	Yes	
			Treble	Yes	
			Balance	Yes	
			BBE On/Off		No
			Stable Sound On/Off	Yes	
			Audio Language	Yes	
			Digital Output(PCM/Dolby Digital)	Yes	
			Surround On/Off	Yes	
			Reset	Yes	
		Set Up		Yes	
			Language	Yes	
			Clock Set	Yes	
			TV/Cable	Yes	
			Auto CH Memory	Yes	
			Add/Delete	Yes	
			Closed Caption	Yes	
			CC Advance(Size, Type, Edge, Color, Background Color)	Yes	
			Signal Meter	Yes	
		Option		Yes	
			Favorite CH	Yes	
			On/Off Timer	Yes	
			CH Label	Yes	
			Video Label		No
		Locks		Yes	
			Password	Yes	
			V-Chip	Yes	
			CH Lock	Yes	
			Video Lock	Yes	
			Game Timer	Yes	
			Front Panel Lock	Yes	
		Control Level		Yes	
			Volume	Yes	
			Brightness	Yes	
			Contrast	Yes	
			Color	Yes	
			Tint	Yes	
			Sharpness	Yes	
			Bass	Yes	
			Treble	Yes	
			Balance	Yes	
			Back Light		No
			Signal Meter	Yes	
		Stereo,Audio Output,SAP		Yes	
		Video		Yes	
		Color Stream		Yes	
		Channel(TV/Cable)		Yes	
		CH Label		Yes	
		Video Label			No
		Clock		Yes	
		Game Timer		Yes	
		On/Off Timer		Yes	
		Sleep Timer		Yes	
		Reset		Yes	
		Sound Mute		Yes	
		Picture Size		Yes	
		V-chip Rating		Yes	
G-8	**OSD Language**			English French Spanish	

GENERAL SPECIFICATIONS

G-9	**Clock and Timer**	Sleep Timer	Max Time	120 Min
			Step	10 Min
		On/Off Timer	Program(On Timer / Off Timer)	Yes
		Timer Back-up (at Power Off Mode) more than		-- Min Sec
G-10	**Remote Control**	Unit		RC-KK
		Glow in Dark Remocon		Yes
		Back Light Remocon		No
		Remocon Format		Toshiba
		Format		Toshiba
		Custom Code		TV:40-BFh
		Power Source	Voltage(D.C)	3V
			UM size x pcs	UM-4 x 2 pcs
		Total Keys		44 Keys
		Keys	Power	Yes
			1	Yes
			2	Yes
			3	Yes
			4	Yes
			5	Yes
			6	Yes
			7	Yes
			8	Yes
			9	Yes
			0	Yes
			100 /+10/ -	Yes
			CH Up	Yes
			CH Down	Yes
			Volume Up	Yes
			Volume Down	Yes
			TV/Video(Input Select)	Yes
			ENT,CH RTN(Quick View)	Yes
			Menu > / FAV Up	Yes
			Menu < / FAV Down	Yes
			Menu Up	Yes
			Menu Down	Yes
			Mute	Yes
			PIC SIZE (16:9)	Yes
			Sleep	Yes
			Exit	Yes
			Light	No
		Multi Brand Keys	TV	Yes
			CBL/SAT	Yes
			VCR	Yes
			DVD	Yes
		(DVD Keys)	Enter	Yes
			DVD Clear	Yes
			Top MENU	Yes
		(TV / DVD Keys)	RECALL(Call) / (Display)	Yes
			Menu/Enter / DVD MENU	Yes
		(DVD / VCR Keys)	Pause/Still	Yes
			FF	Yes
			Rew	Yes
			Play	Yes
			Stop	Yes
			<</Skip / Search Forward	Yes
			>>/Skip / Search Forward	Yes
		(VCR Keys)	Rec	Yes
			TV/VCR	Yes

GENERAL SPECIFICATIONS

G-11	**Features**	Auto Degauss		Yes
		Auto Shut Off		Yes
		Canal+		No
		Cable(CATV)		Yes
		Anti-theft		No
		Rental		No
		Memory(Last CH)		Yes
		Memory(Last Volume)		Yes
		V-Chip(Analog & Digital)		Yes
			Type	USA,Orion Type
		BBE		No
		Auto Search		No
		CH Allocation		No
		SAP		Yes
		Just Clock Function		No
		CH Label		Yes
		VM Circuit		Yes
		Full OSD		No
		Premiere		No
		Comb Filter		Yes
				3 Lines
		Auto CH Memory		Yes
		Hotel Lock		No
		Closed Caption(Analog & Digital)		Yes
		CC Advance		Yes
		Stable Sound		Yes
		FBT Leak Test Protect		Yes
		CH Lock		Yes
		Video Lock		Yes
		Game Timer (Max Time:120 Min)		Yes
		Energy Star		No
		Favorite CH		Yes
		Surround		Yes
		Picture Size		Yes
		Tone Control		Yes
		Video Label		No
		Variable Audio Out		No
		Front Panel Lock		Yes
		QAM		Yes
		Digital Out	Dolby Digital	Yes
			MPEG	No
			PCM	Yes
			DTS	No
		Zoom		Yes
G-12	**Accessories**	Owner's Manual	Language	English /Spanish
			W/ Warranty	Yes
		Remote Control Unit		Yes
		Rod Antenna		No
			Poles	
			Terminal	
		Loop Antenna		No
			Terminal	-
		U/V Mixer		No
		DC Car Cord (Center+)		No
		Guarantee Card		No
		Warning Sheet		No
		Circuit Diagram		No
		Antenna Change Plug		No
		Service Station List		No
		Important Safety Instruction		No
		Dew/AHC Caution Sheet		No
		AC Plug Adapter		No
		Quick Set-up Sheet		No
		Battery		Yes
			UM size x pcs	UM-4 x 2
			OEM Brand	No
		AC Cord		No
		AV Cord (2Pin-1Pin)		No
		Registration Card (NDL Card)		Yes
		PTB Sheet		No
		ESP Card		No
		300 ohm to 75 ohm Antenna Adapter		No

GENERAL SPECIFICATIONS

G-13	**Interface**	Switch	Front	Power	Yes
				System Select	No
				Main Power SW	No
				Sub Power	No
				Channel Up	Yes
				Channel Down	Yes
				Volume Up	Yes
				Volume Down	Yes
			Rear	AC/DC	No
				TV/CATV Selector	No
				Degauss	No
				Main Power SW	No
		Indicator		Power	Yes(RED)
				Stand-by	No
				On Timer	No
		Terminals	Front	Video Input = VIDEO2	RCA
				Audio Input = VIDEO2	RCA x 2 (L/MONO,R)
				Other Terminal	No
			Rear	Video Input(Rear1) = VIDEO1	RCA
				Video Input(Rear2)	No
				Audio Input(Rear1) = VIDEO1	RCA x 2 (L/MONO,R)
				Audio Input(Rear2)	No
				Video Output	No
				Audio Output	RCA x 2 (L/MONO,R)
				S Input	Yes
				Color Stream Input (w/ Analog Audio L/R)	RCA x 5
				Digital Audio Out	Coaxial x 1
				Diversity	No
				Ext Speaker	No
				DC Jack 12V(Center +)	No
				VHF/UHF Antenna Input	F Type
				AC Outlet	No
G-14	**Set Size**			Approx. W x D x H (mm)	740 x 495 x 574.5
G-15	**Weight**			Net (Approx.)	40.0 kg (88.2lbs)
				Gross (Approx.)	46.5 kg (102.5lbs)
G-16	**Carton**		Master Carton		No
				Content	---- Sets
				Material	-- /--
				Dimensions W x D x H(mm)	-- x -- x --
				Description of Origin	No
			Gift Box		Yes
				Material	Double/Brown
				Dimensions W x D x H(mm)	850 x 620 x 665
				Design	As per Buyer's
				Description of Origin	Yes
			Drop Test		Natural Dropping At 1 Corner / 2 Edges / 4 Surfaces
				Height (cm)	40 (ORION SPEC:25)
			Container Stuffing		156 Sets/40' container
G-17	**Cabinet Material**		Cabinet	Cabinet Front	PS 94V0 DECABROM
				Cabinet Rear	PS 94V0 DECABROM
			PCB	Non-Halogen Demand	No
				Eyelet Demand	Yes
G-18	**Environment**		Environmental standard requirement (by buyer)		Green procurement of Toshiba
			Pb-free		Phase3(Phase3A)

DISASSEMBLY INSTRUCTIONS

1. REMOVAL OF ANODE CAP

Read the following **NOTED** items before starting work.

* After turning the power off there might still be a potential voltage that is very dangerous. When removing the Anode Cap, make sure to discharge the Anode Cap's potential voltage.
* Do not use pliers to loosen or tighten the Anode Cap terminal, this may cause the spring to be damaged.

REMOVAL

1. Follow the steps as follows to discharge the Anode Cap. **(Refer to Fig. 1-1.)**
   Connect one end of an Alligator Clip to the metal part of a flat-blade screwdriver and the other end to ground.
   While holding the plastic part of the insulated Screwdriver, touch the support of the Anode with the tip of the Screwdriver.
   A cracking noise will be heard as the voltage is discharged.

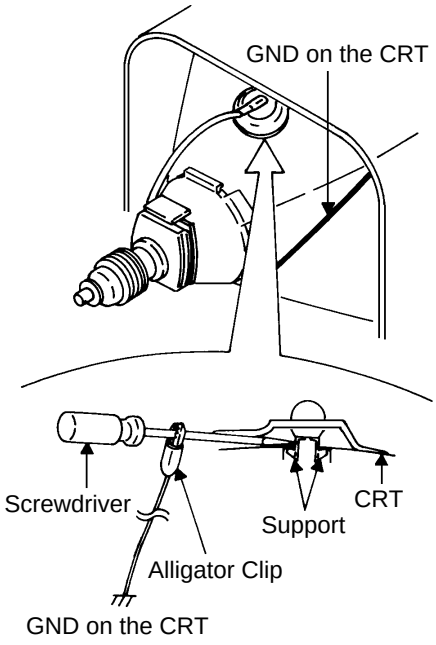

Fig. 1-1

2. Flip up the sides of the Rubber Cap in the direction of the arrow and remove one side of the support. **(Refer to Fig. 1-2.)**

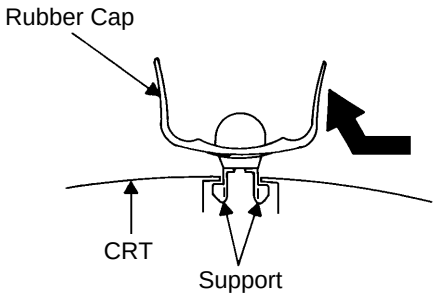

Fig. 1-2

3. After one side is removed, pull in the opposite direction to remove the other.

NOTE

Take care not to damage the Rubber Cap.

INSTALLATION

1. Clean the spot where the cap was located with a small amount of alcohol. **(Refer to Fig. 1-3.)**

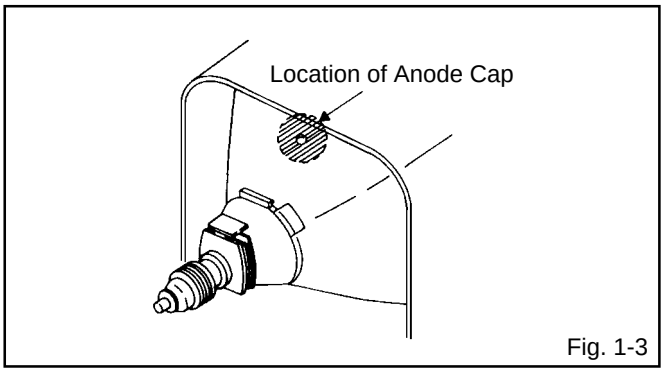

Fig. 1-3

NOTE

Confirm that there is no dirt, dust, etc. at the spot where the cap was located.

2. Arrange the wire of the Anode Cap and make sure the wire is not twisted.
3. Turn over the Rubber Cap. **(Refer to Fig. 1-4.)**

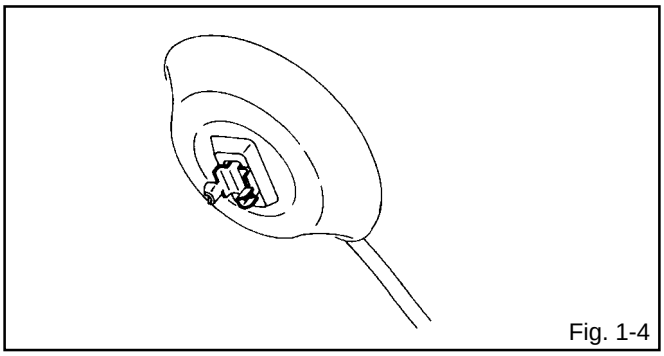
Fig. 1-4

4. Insert one end of the Anode Support into the anode button, then the other as shown in **Fig. 1-5**.

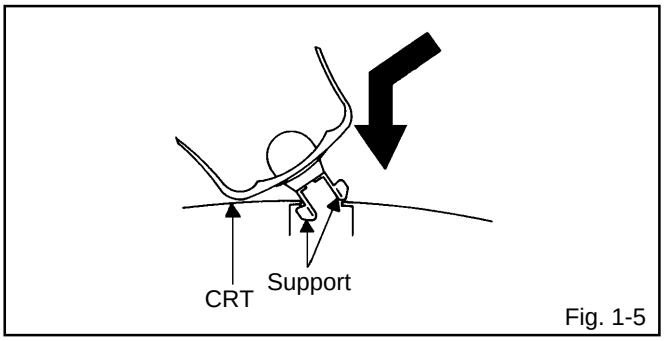

Fig. 1-5

5. Confirm that the Support is securely connected.
6. Put on the Rubber Cap without moving any parts.

DISASSEMBLY INSTRUCTIONS

2. REMOVAL AND INSTALLATION OF FLAT PACKAGE IC

REMOVAL

1. Put the Masking Tape (cotton tape) around the Flat Package IC to protect other parts from any damage. **(Refer to Fig. 2-1.)**

   NOTE

   Masking is carried out on all the parts located within 10 mm distance from IC leads.

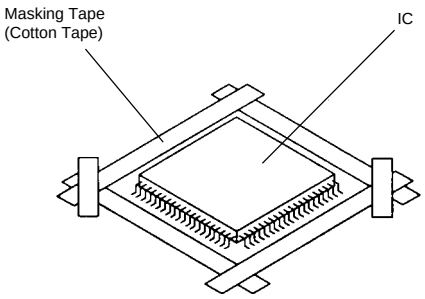

Fig. 2-1

2. Heat the IC leads using a blower type IC desoldering machine. **(Refer to Fig. 2-2.)**

   NOTE

   Do not add the rotating and the back and forth directions force on the IC, until IC can move back and forth easily after desoldering the IC leads completely.

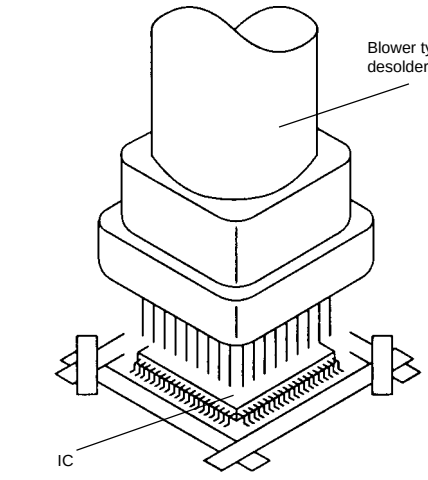

Fig. 2-2

3. When IC starts moving back and forth easily after desoldering completely, pickup the corner of the IC using a tweezers and remove the IC by moving with the IC desoldering machine. **(Refer to Fig. 2-3.)**

   NOTE

   Some ICs on the PCB are affixed with glue, so be careful not to break or damage the foil of each IC leads or solder lands under the IC when removing it.

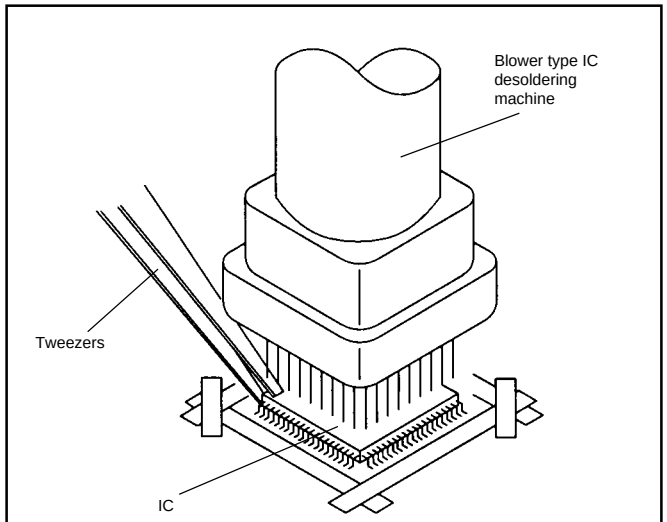

Fig. 2-3

4. Peel off the Masking Tape.

5. Absorb the solder left on the pattern using the Braided Shield Wire. **(Refer to Fig. 2-4.)**

   NOTE

   Do not move the Braided Shield Wire in the vertical direction towards the IC pattern.

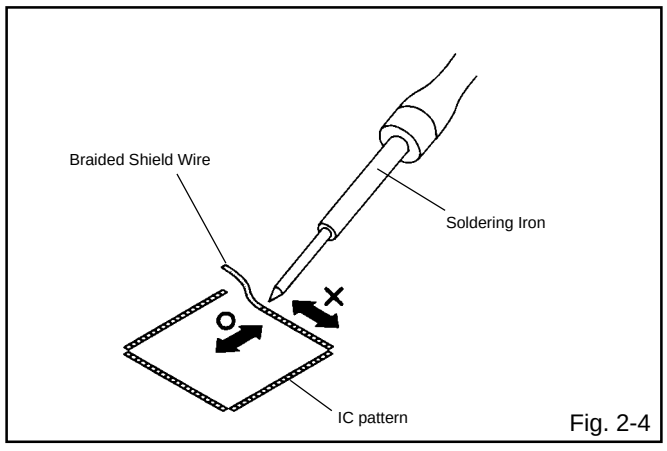

Fig. 2-4

DISASSEMBLY INSTRUCTIONS

INSTALLATION

1. Take care of the polarity of new IC and then install the new IC fitting on the printed circuit pattern. Then solder each lead on the diagonal positions of IC temporarily. **(Refer to Fig. 2-5.)**

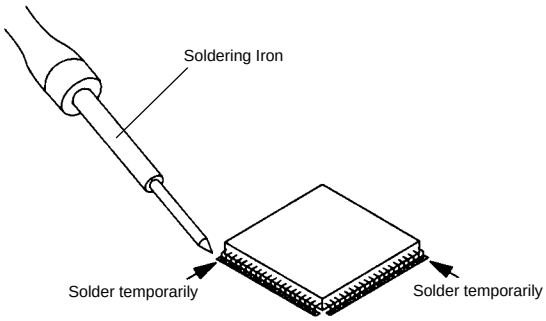

Fig. 2-5

2. Supply the solder from the upper position of IC leads sliding to the lower position of the IC leads. **(Refer to Fig. 2-6.)**

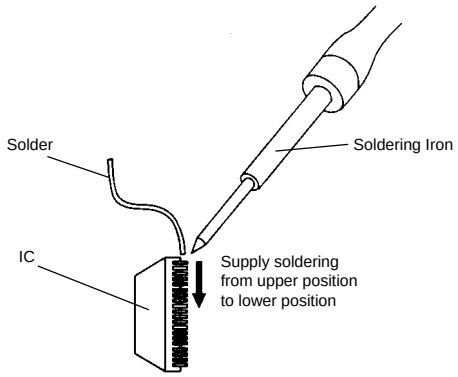

Fig. 2-6

3. Absorb the solder left on the lead using the Braided Shield Wire. **(Refer to Fig. 2-7.)**

   NOTE

   Do not absorb the solder to excess.

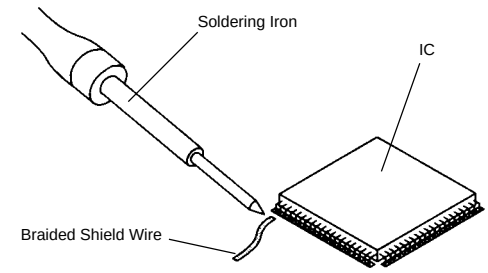

Fig. 2-7

4. When bridge-soldering between terminals and/or the soldering amount are not enough, resolder using a Thin-tip Soldering Iron. **(Refer to Fig. 2-8.)**

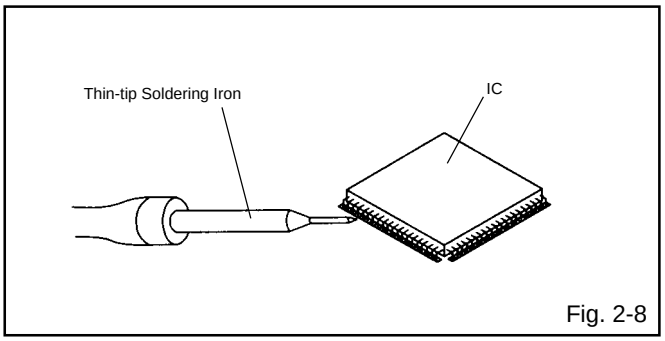

Fig. 2-8

5. Finally, confirm the soldering status on four sides of the IC using a magnifying glass.
   Confirm that no abnormality is found on the soldering position and installation position of the parts around the IC. If some abnormality is found, correct by resoldering.

   NOTE

   When the IC leads are bent during soldering and/or repairing, do not repair the bending of leads. If the bending of leads are repaired, the pattern may be damaged. So, always be sure to replace the IC in this case.

SERVICE MODE LIST

This unit provided with the following SERVICE MODES so you can repair, examine and adjust easily.
To enter the Service Mode, press both set key and remote control key for more than 2 seconds.

Set Key	Remocon Key	Operations
VOL. (-) MIN	0	Releasing of V-CHIP PASSWORD.
VOL. (-) MIN	1	Initialization of factory data. NOTE: Do not use this for normal servicing. If you set factory initialization, the memories are reset such as the channel setting, and the POWER ON total hours.
VOL. (-) MIN	8	Check of the SUM DATA and MICON VERSION on the screen. Refer to the "WHEN REPLACING EEPROM (MEMORY) IC".
VOL. (-) MIN	6	Check for the firmware version. Can be checked of the INITIAL DATA of MEMORY IC. Refer to the "WHEN REPLACING EEPROM (MEMORY) IC".
VOL. (-) MIN	9	Display of the Adjustment MENU on the screen. Refer to the "ELECTRICAL ADJUSTMENT" (On-Screen Display Adjustment).

WHEN REPLACING EEPROM (MEMORY) IC

CONFIRMATION OF CHECK SUM, POWER ON TOTAL HOURS, MICON VERSION AND DIGITAL TV MICON FIRMWARE VERSION

Initial total of MEMORY IC, POWER ON total hours, MICON VERSION and Digital TV MICON Firmware VERSION can be checked on the screen. Total hours are displayed in 16 system of notation.

NOTE: If you set a factory initialization, the total hours is reset to "0".
Please refer to "CONFIRMATION OF INITIAL DATA" when SUM DATA is not corresponding.

1. Turn on the POWER, and set to the TV mode.
2. Set the VOLUME to minimum.
3. Press both VOL. DOWN button on the set and Channel button **(8)** on the remote control for more than 2 seconds.
4. After the confirmation of each check sum, power on total hours, digital tv micon firware and micon version, turn off the power.

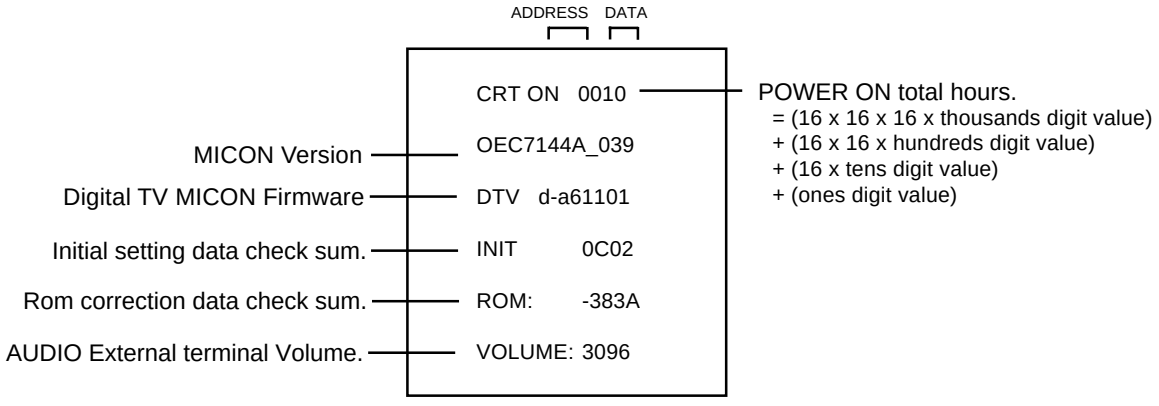

FIG. 1

WHEN REPLACING EEPROM (MEMORY) IC

If a service repair is undertaken where it has been required to change the MEMORY IC, the following steps should be taken to ensure correct data settings while making reference to TABLE 1.

INI	+0	+1	+2	+3	+4	+5	+6	+7	+8	+9	+A	+B	+C	+D	+E	+F
00	C1	A6	0D	07	32	08	02	0A	00	80	07	00	30	36	03	00
10	68	00	11	11	88	88	16	00	00	00	34	06	00	05	AA	00
20	7D	00	00	22	00	04	00	00	00	00	00	00	00	00	00	00
30	31	80	07	22	03	03	00	00	00	01	D0	02	91	13	00	00
40	00	00	00	00	00	00	00	40	40	40	00	40	20	00	40	00
50	40	40	00	00	19	00	0C	00	43	04	11	00	00	00	00	00
60	00	05	12	13	00	82	00	00	00	00	04	00	01	01	01	01
70	00	00	00	14	07	00	63	2F	00	00	00	00	00	00	00	00
C0	00	00	00	00	00	00	00	00	00	00	00	00	00	00	00	00
D0	00	00	00	00	00	00	00	00	00	00	00	00	00	00	00	00
E0	00	00	00	00	00	00	00	00	00	00	00	00	00	00	00	00
F0	00	..	..	..	..	..	..	..	..	..	..	..	..	..	..	..

Table 1

CONFIRMATION OF INITIAL DATA

1. Enter DATA SET mode by setting VOLUME to minimum.
2. Press both VOL. DOWN button on the set and Channel button **(6)** on the remote control for more than 2 seconds. ADDRESS and DATA should appear as FIG 1.
3. ADDRESS is now selected and should "blink". Using the UP/DOWN button on the remote, step through the ADDRESS until required ADDRESS to be changed is reached.
4. Press RIGHT/LEFT button to select DATA. When DATA is selected, it will "blink".
5. Again, step through the DATA using UP/DOWN button until required DATA value has been selected.
6. Pressing RIGHT/LEFT button will take you back to ADDRESS for further selection if necessary.
7. Repeat steps 3 to 6 until all data has been checked.
8. When satisfied correct DATA has been entered, turn POWER off (return to STANDBY MODE) to finish DATA input.

After the data input, set to the initializing of shipping.

9. Turn POWER on.
10. Press both VOL. DOWN button on the set and Channel button **(1)** on the remote control for more than 2 seconds.
11. After the finishing of the initializing of shipping, the unit will turn off automatically.

The unit will now have the correct DATA for the new MEMORY IC.

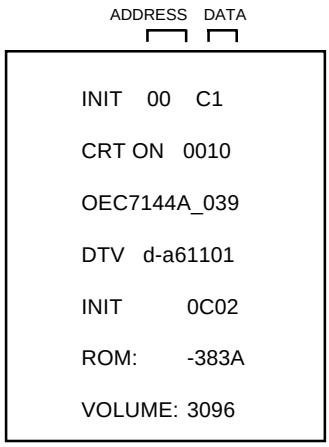

FIG. 1

RE-WRITE FOR DIGITAL SOFT FIRMWARE

JG198 Serial Communication Change JIG 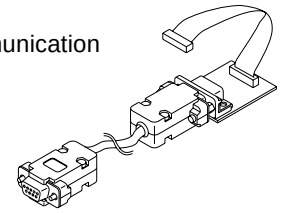	JG199 Flash UP-Date Soft Disc 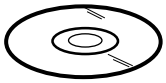	JG176 USA SD DTV ROM DISC 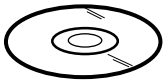

Ref. No.	Part No.	Parts Name	Remarks
JG198	APJG198000	Serial Communication Change JIG	Connect the set to personal computer
JG199	APJG199000	Flash UP-Date Soft Disc	Up-Date of the Firmware
JG176	APJG176093	USA SD DTV ROM DISC	Up-Date of the Firmware

1. Confirm that the AC cord is plugged out.
2. Using the Serial Communication Change JIG **(JG198)**, connect the set to personal computer. **(Refer to Fig. 1)**
   NOTE: It is possible to write only with the personal computer of WINDOWS.

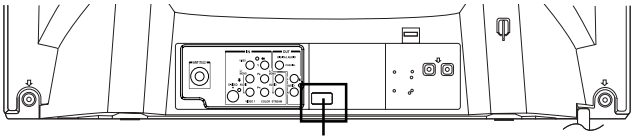

Fig. 1

3. Using the Flash UP-Date Soft Disc **(JG199)** and USA SD DTV ROM DISC **(JG176)**, please Re-write the DIGITAL SOFT FIRMWARE.
   The operating manual for Re-writing is included in Flash UP-Date Soft Disc **(JG199)**.

ELECTRICAL ADJUSTMENTS

1. ADJUSTMENT PROCEDURE

Read and perform these adjustments when repairing the circuits or replacing electrical parts or PCB assemblies.

CAUTION

- Use an isolation transformer when performing any service on this chassis.
- Before removing the anode cap, discharge electricity because it contains high voltage.
- When removing a PCB or related component, after unfastening or changing a wire, be sure to put the wire back in its original position.
- When you exchange IC and Transistor with a heat sink, apply silicon grease on the contact section of the heat sink. Before applying new silicon grease, remove all the old silicon grease. (Old grease may cause damages to the IC and Transistor.)

Prepare the following measurement tools for electrical adjustments.

1. Oscilloscope
2. Digital Voltmeter
3. Multi-sound Generator
4. Pattern Generator

On-Screen Display Adjustment

1. In the condition of NO indication on the screen. Press the VOL. DOWN button on the set and the Channel button **(9)** on the remote control for more than 2 seconds to appear the adjustment mode on the screen as shown in **Fig. 1-1**.

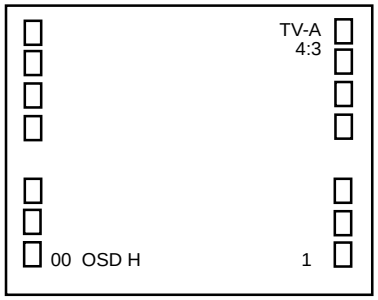

Fig. 1-1

2. Use the Channel UP/DOWN button or Channel button **(0-9)** on the remote control to select the options shown in **Fig. 1-2**.
3. Press the MENU button on the remote control to end the adjustments.
4. To display the adjustment screen for AV, CS and DIGITAL mode, press the TV/VIDEO button on the remote control to set to the AV, CS and DIGITAL mode. Press the VOL.DOWN button on the set and the channel **(9)** on the remote control for more than 2 seconds.

NO.	FUNCTION	NO.	FUNCTION
00	OSD H	21	CONT.MAX
01	OSD C	22	CONT.MIN
03	H.POSI	23	COL.CENT
04	H BLK L	24	COL.MAX
05	H BLK R	25	COL.MIN
06	V. SIZE	26	TINT CENT
07	V. POSI	27	SHARP.CENT
08	V. LIN	28	SHARP.MAX
09	VS CORR	29	SHARP.MIN
10	V COMP	30	SUB BIAS
11	R.BIAS	31	H.SIZE
12	G.BIAS	32	PARABOLA
13	B.BIAS	33	TRAPEZIUM
14	R.DRV	34	COR TOP
15	G.DRV	35	COR BTM
16	B.DRV	36	TEST STEREO
17	BRI.CENT	37	TEST AUDIO
18	BRI.MAX	38	H FREQ
19	BRI.MIN		
20	CONT.CENT		

Fig. 1-2

2. BASIC ADJUSTMENTS

2-1: CONSTANT VOLTAGE

1. Place the set in AV MODE without signal.
2. Connect the digital voltmeter to the **TP003**.
3. Adjust the **VR502** until the digital voltmeter is 130 ± 0.5V.

2-2: CUT OFF

1. Place the set in Aging Test for more than 15 minutes.
2. Place the set in AV MODE without signal.
3. Using the remote control, set the brightness and contrast to normal position.
4. Activate the adjustment mode display of **Fig. 1-1** and press the channel button **(02)** on the remote control to select “CUT OFF”.
5. Adjust the **Screen Volume** until a dim raster is obtained.

2-3: FOCUS

1. Receive the monoscope pattern.
2. Turn the Focus Volume fully counterclockwise once.
3. Adjust the **Focus Volume** until picture is distinct.

2-4: WHITE BALANCE

NOTE: Adjust after performing CUT OFF adjustment.

1. Place the set in Aging Test for more than 15 minutes.
2. Receive the white 100% signal from the Pattern Generator.
3. Using the adjustment control, set the brightness and contrast to normal position.
4. Activate the adjustment mode display of **Fig. 1-1** and press the channel button **(11)** on the remote control to select "R.BIAS".
5. Using the VOL. UP/DOWN button on the remote control, adjust the R.BIAS.
6. Press the CH. UP/DOWN button on the remote control to select the "R.DRIVE", "B.DRIVE", "G.BIAS" or "B.BIAS".
7. Using the VOL. UP/DOWN button on the remote control, adjust the R.DRIVE, B.DRIVE, G.BIAS or B.BIAS.
8. Perform the above adjustments 6 and 7 until the white color is achieved.

ELECTRICAL ADJUSTMENTS

2-5: BRIGHT CENT

1. Receive the monoscope pattern. (RF Input)
2. Set the screen mode to FULL.
3. Using the remote control, set the brightness and contrast to normal position.
4. Activate the adjustment mode display of **Fig. 1-1** and press the channel button **(17)** on the remote control to select "BRI. CENT".
5. Press the VOL. UP/DOWN button on the remote control until the white 8.1% is starting to be visible
6. Receive the monoscope pattern. (Audio Video Input)
7. Press the TV/VIDEO button on the remote control to set to the AV mode. Then perform the above adjustments 2~5.
8. Receive the monoscope pattern.
9. Press the TV/VIDEO button on the remote control to set to the CS mode.Then perform the above adjustments 2~5.

2-6: CONTRAST MAX

1. Receive an over 70dB color bar pattern. (RF Input)
2. Using the remote control, set the brightness and contrast to normal position.
3. Activate the adjustment mode display of **Fig. 1-1** and press the channel button **(21)** on the remote control to select "CONT.MAX".
4. Press the CH. UP/DOWN button on the remote control until the contrast step No. becomes "102".
5. Receive a broadcast and check if the picture is normal.
6. Receive the color bar pattern. (Audio Video Input)
7. Press the TV/VIDEO button on the remote control to set to the AV mode. Then perform the above adjustments 2~5.
8. Receive the monoscope pattern.
9. Press the TV/VIDEO button on the remote control to set to the CS mode.Then perform the above adjustments 2~5.

2-7: TINT

1. Receive the color bar pattern. (RF Input)
2. Using the remote control, set the brightness and contrast to normal position.
3. Connect the oscilloscope to **TP024**.
4. Activate the adjustment mode display of **Fig. 1-1** and press the channel button **(26)** on the remote control to select "TINT".
5. Press the VOL. UP/DOWN button on the remote control until the section A becomes as straight line. **(Refer to Fig. 2-1)**
6. Receive the monoscope pattern. (Audio Video Input)
7. Press the TV/VIDEO button on the remote control to set to the AV mode. Then perform the above adjustments 2~5. **(Refer to Fig. 2-1)**
8. Receive the monoscope pattern.
9. Press the TV/VIDEO button on the remote control to set to the CS mode.Then perform the above adjustments 2~5.
10. Receive the monoscope pattern.
11. Press the TV/VIDEO button on the remote control to set to the DIGITAL mode.Then perform the above adjustments 2~5. **(Refer to Fig. 2-1)**

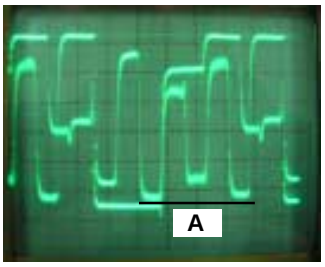

Fig. 2-1

2-8: COLOR CENT

1. Receive the color bar pattern. (RF Input)
2. Using the remote control, set the brightness, contrast, color and tint to normal position.
3. Connect the oscilloscope to **TP022**.
4. Activate the adjustment mode display of **Fig. 1-1** and press the channel button **(23)** on the remote control to select "COL.CENT".
5. Adjust the VOLTS RANGE VARIABLE knob of the oscilloscope until the range between white 100% and 0% is set to 4 scales on the screen of the oscilloscope.
6. Press the VOL. UP/DOWN button on the remote control until the red color level is adjusted to 110 ± 10% of the white level. **(Refer to Fig. 2-2)**
7. Receive the video color bar pattern. (Audio Video Input)
8. Press the AV mode. Then perform the above adjustments 2~6.**(Refer to Fig. 2-2)**
9. Receive the video color bar pattern.
10. Press the TV/VIDEO button on the remote control to set to the CS mode.Then perform the above adjustments 2~6.
11. Receive the video color bar pattern.
12. Press the TV/VIDEO button on the remote control to set to the DIGITAL mode.Then perform the above adjustments 2~6.**(Refer to Fig. 2-2)**

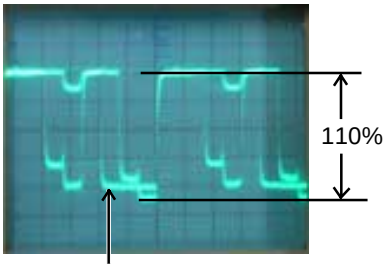

Fig. 2-2

2-9: HORIZONTAL POSITION

1. Receive the monoscope pattern.
2. Using the remote control, set the brightness and contrast to normal position.
3. Activate the adjustment mode display of **Fig. 1-1** and press the channel button **(03)** on the remote control to select “H.POSI”.
4. Press the VOL. UP/DOWN button on the remote control until the SHIFT quantity of the OVER SCAN on right and left becomes minimum.

ELECTRICAL ADJUSTMENTS

2-10: HORIZONTAL SIZE

1. Receive the monoscope pattern.
2. Using the remote control, set the brightness and contrast to normal position.
3. Activate the adjustment mode display of **Fig. 1-1** and press the channel button **(31)** on the remote control to select "H.SIZE".
4. Press the VOL. UP/DOWN button on the remote control until the SHIFT quantity of the OVER SCAN on the right and left becomes 10± 2%.

2-11: VERTICAL LINEARITY

1. Receive the monoscope pattern.
2. Using the remote control, set the brightness, contrast, to normal position.
3. Activate the adjustment mode display of **Fig. 1-1** and press the channel button **(08)** on the remote control to select "V.LIN".
4. Press the VOL. UP/DOWN button on the remote control until the SHIFT quantity of the OVER SCAN on upside and downside becomes minimum.

2-12: VERTICAL POSITION

1. Receive the monoscope pattern.
2. Using the remote control, set the brightness and contrast to normal position.
3. Adjust the VR401 until the horizontal line becomes fit to the notch of the shadow mask.
   (Refer to Fig. 2-3)

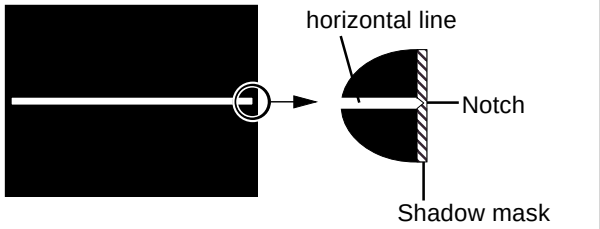

Fig. 2-3

2-13: VERTICAL SIZE

1. Receive the monoscope pattern.
2. Using the remote control, set the brightness and contrast to normal position.
3. Activate the adjustment mode display of **Fig. 1-1** and press the channel button **(06)** on the remote control to select “V. SIZE”.
4. Press the VOL. UP/DOWN button on the remote control until the SHIFT quantity of the OVER SCAN on upside and downside becomes 10 ± 2%.

2-14: TRAPEZIUM

1. Receive the crosshatch signal from the Pattern Generator.
2. Using the remote control, set the brightness and contrast to normal position.
3. Activate the adjustment mode display of **Fig. 1-1** and press the channel button **(33)** on the remote control to select “TRAPEZIUM”.
4. Press the VOL. UP/DOWN button on the remote control until the both ends right and left vertical lines of the 1th length lines screen become parallel.

2-15: PALABOLA CORR

1. Receive the chosshatch pattern.
2. Using the remote control, set the brightness and contrast to normal position.
3. Activate the adjustment mode display of **Fig. 1-1** and press the channel button **(32)** on the remote control to select “PALABOLA”.
4. Press the VOL. UP/DOWN button on the remote control, so that the line becomes straight from the outside of the right and left.

2-16: COR TOP/BTM

1. Receive the crosshatch signal from the Pattern Generator.
2. Set the screen mode to FULL.
3. Using the remote control, set the brightness and contrast to normal position.
4. Activate the adjustment mode display of **Fig. 1-1** and press the channel button **(34)** on the remote control to select “COR. TOP”.
5. Press the VOL. UP/DOWN button on the remote control until the both ends vertical lines become straight.
6. Activate the adjustment mode display of **Fig. 1-1** and press the channel button **(35)** on the remote control to select “COR. BTM”.
7. Press the VOL. UP/DOWN button on the remote control until the both ends vertical lines of the screen become parallel.

ELECTRICAL ADJUSTMENTS

2-17: OSD POSITION

1. Receive the monoscope pattern from the Pattern Generator.
2. Using the remote control, set the brightness and contrast to normal position.
3. Activate the adjustment mode display of **Fig. 1-1** and press the channel button **(00)** on the remote control to select "OSD H".
4. Press the VOL. UP/DOWN button on the remote control until the difference of A and B becomes minimum. **(Refer to Fig. 2-4)**

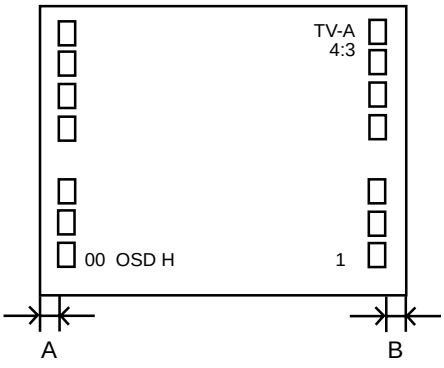

Fig. 2-4

2-18: Confirmation of Fixed Value (Step No.)

Please check if the fixed values of each of the adjustment items are set correctly referring below.

NO.	FUNCTION	RF	AV	CS	DIGITAL
1	OSD C	4	4	4	4
4	H BLK L	5	5	5	5
5	H BLK R	2	2	2	2
7	V.POSI	1	1	1	1
9	VS CORR	16	16	16	16
10	V COMP	0	0	0	0
18	BRI.MAX	120	120	120	120
19	BRI.MIN	30	30	30	30
20	CONT.CENT	60	60	60	60
22	CONT.MIN	30	30	30	30
24	COL.MAX	120	120	120	120
25	COL.MIN	20	20	20	20
27	SHARP.CENT	30	30	30	30
28	SHARP.MAX	50	50	50	50
29	SHARP.MIN	10	10	10	10
30	SUB BIAS	0	0	0	0
36	TEST STEREO	0	0	0	0
37	TEST AUDIO	0	0	0	0
38	H FREQ	7	7	7	7

ELECTRICAL ADJUSTMENTS

3. PURITY AND CONVERGENCE ADJUSTMENTS

NOTE

1. Turn the unit on and let it warm up for at least 30 minutes before performing the following adjustments.
2. Place the CRT surface facing east or west to reduce the terrestrial magnetism.
3. Turn ON the unit and demagnetize with a Degauss Coil.

3-1: STATIC CONVERGENCE (ROUGH ADJUSTMENT)

1. Tighten the screw for the magnet. Refer to the adjusted CRT for the position. **(Refer to Fig. 3-1)**
   If the deflection yoke and magnet are in one body, untighten the screw for the body.
2. Receive the green raster pattern from the color bar generator.
3. Slide the deflection yoke until it touches the funnel side of the CRT.
4. Adjust center of screen to green, with red and blue on the sides, using the pair of purity magnets.
5. Switch the color bar generator from the green raster pattern to the crosshatch pattern.
6. Combine red and blue of the 3 color crosshatch pattern on the center of the screen by adjusting the pair of 4 pole magnets.
7. Combine red/blue (magenta) and green by adjusting the pair of 6 pole magnets.
8. Adjust the crosshatch pattern to change to white by repeating steps 6 and 7.

3-2: PURITY

NOTE

Adjust after performing adjustments in section 3-1.

1. Receive the green raster pattern from color bar generator.
2. Adjust the pair of purity magnets to center the color on the screen.
   Adjust the pair of purity magnets so the color at the ends are equally wide.
3. Move the deflection yoke backward (to neck side) slowly, and stop it at the position when the whole screen is green.
4. Confirm red and blue color.
5. Adjust the slant of the deflection yoke while watching the screen, then tighten the fixing screw.

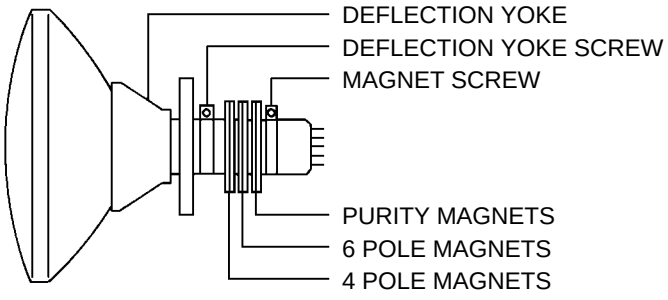

Fig. 3-1

3-3: STATIC CONVERGENCE

NOTE

Adjust after performing adjustments in section 3-2.

1. Receive the crosshatch pattern from the color bar generator.
2. Combine red and blue of the 3 color crosshatch pattern on the center of the screen by adjusting the pair of 4 pole magnets.
3. Combine red/blue (magenta) and green by adjusting the pair of 6 pole magnets.

3-4: DYNAMIC CONVERGENCE

NOTE

Adjust after performing adjustments in section 3-3.

1. Adjust the differences around the screen by moving the deflection yoke upward/downward and right/left. **(Refer to Fig. 3-2-a)**
2. Insert three wedges between the deflection yoke and CRT funnel to fix the deflection yoke. **(Refer to Fig. 3-2-b)**

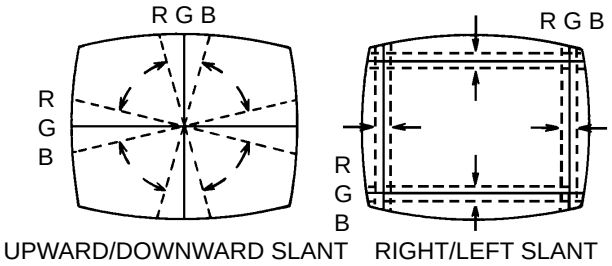

Fig. 3-2-a

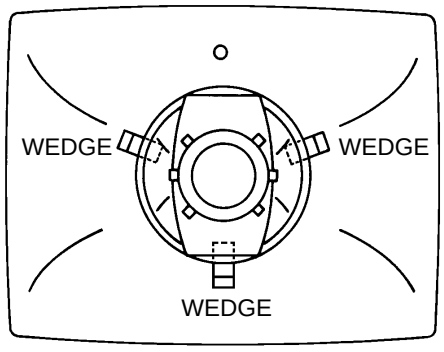

Fig. 3-2-b

ELECTRICAL ADJUSTMENTS

4. ELECTRICAL ADJUSTMENT PARTS LOCATION GUIDE (WIRING CONNECTION)

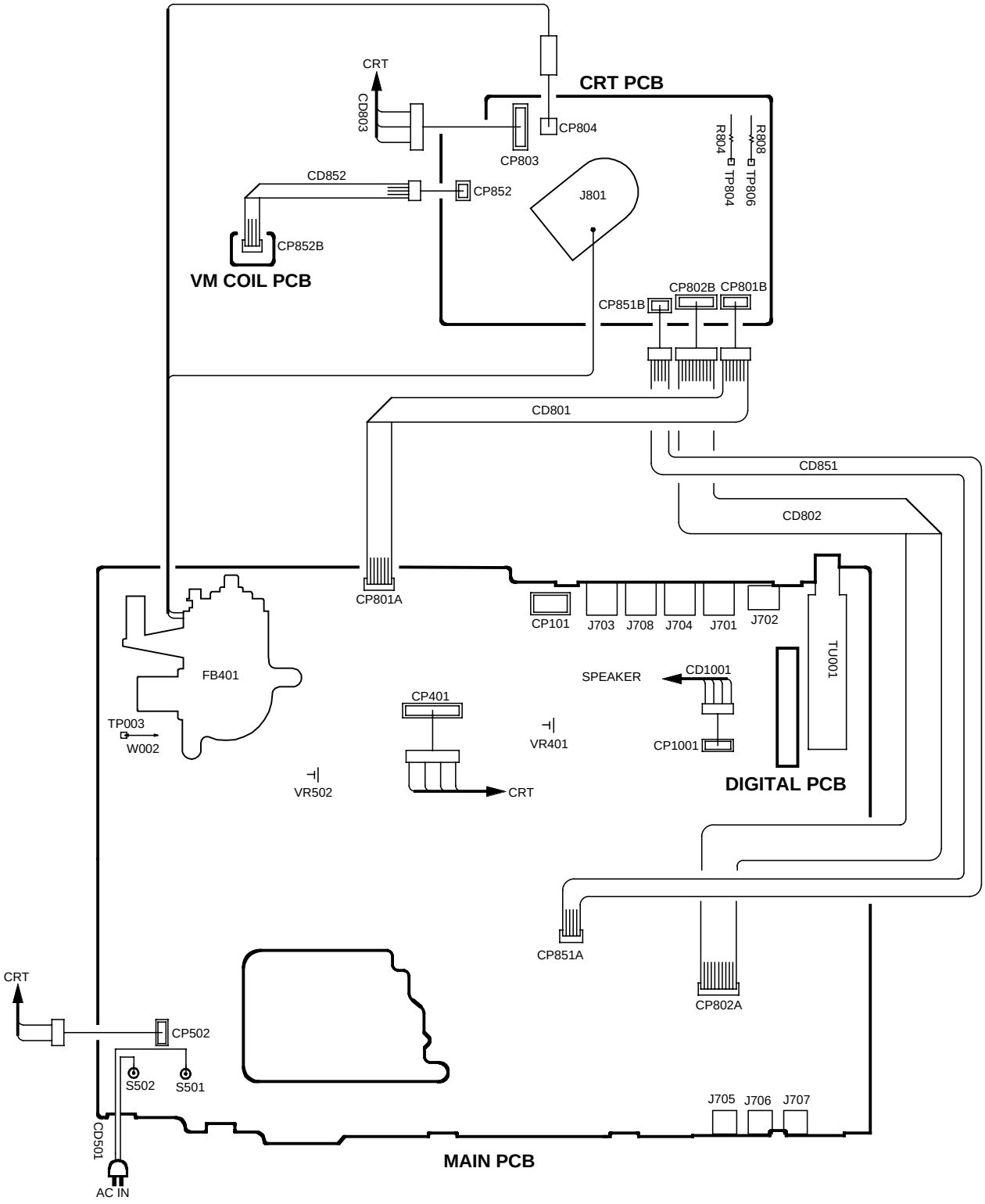

MICON/CHROMA BLOCK DIAGRAM

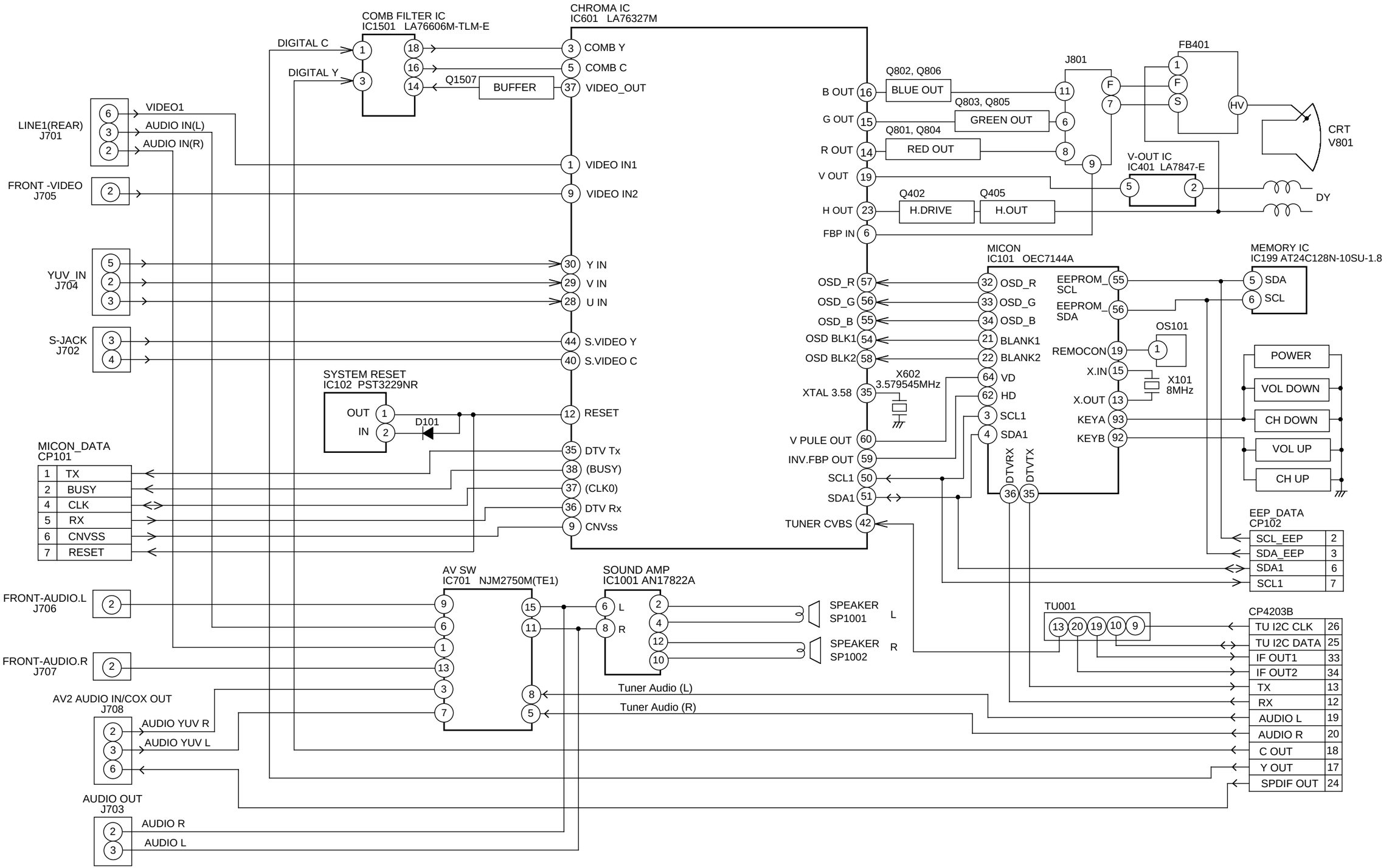

SD DIGITAL MODULE BLOCK DIAGRAM

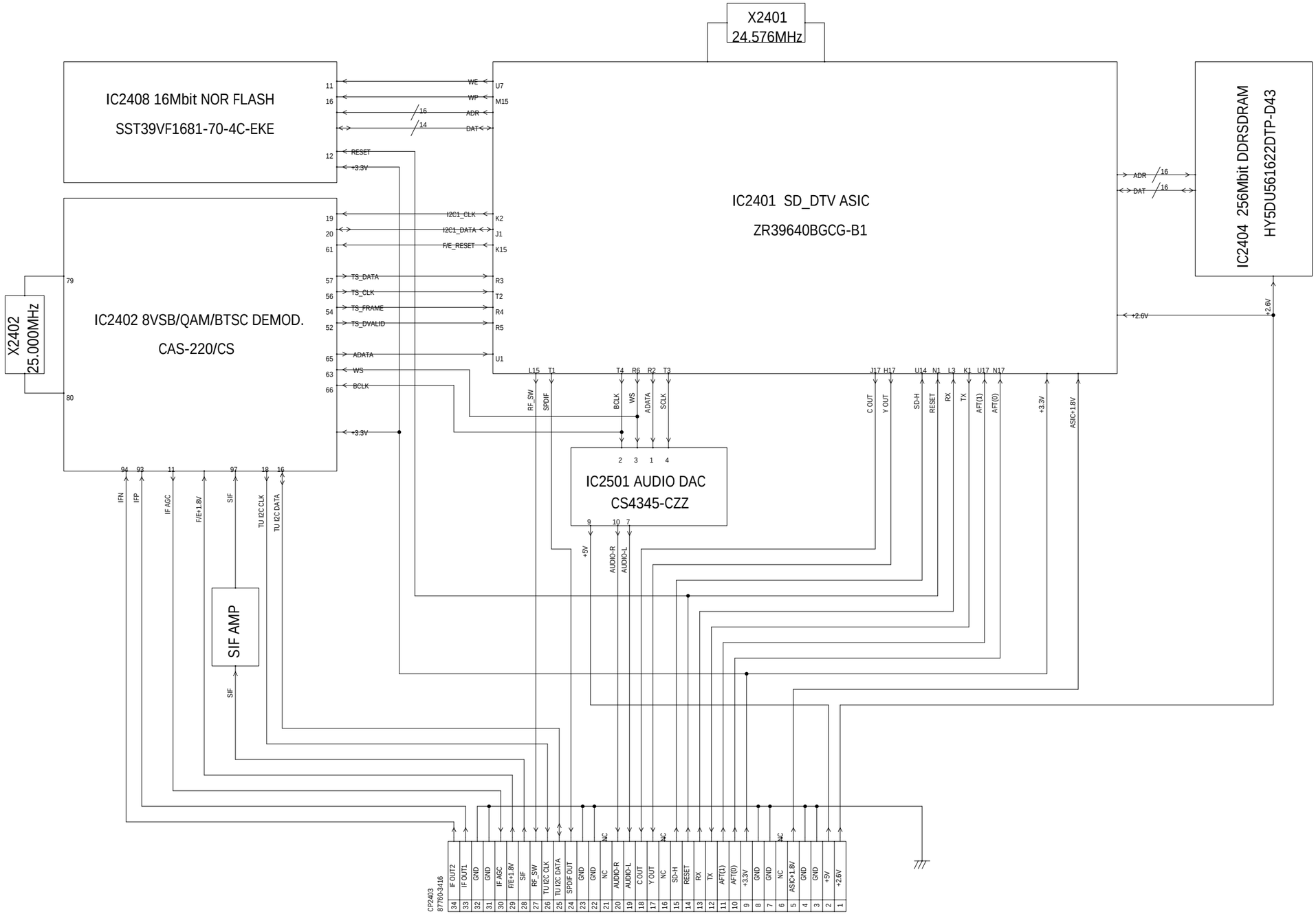

PRINTED CIRCUIT BOARDS
MAIN (INSERTED PARTS)
SOLDER SIDE

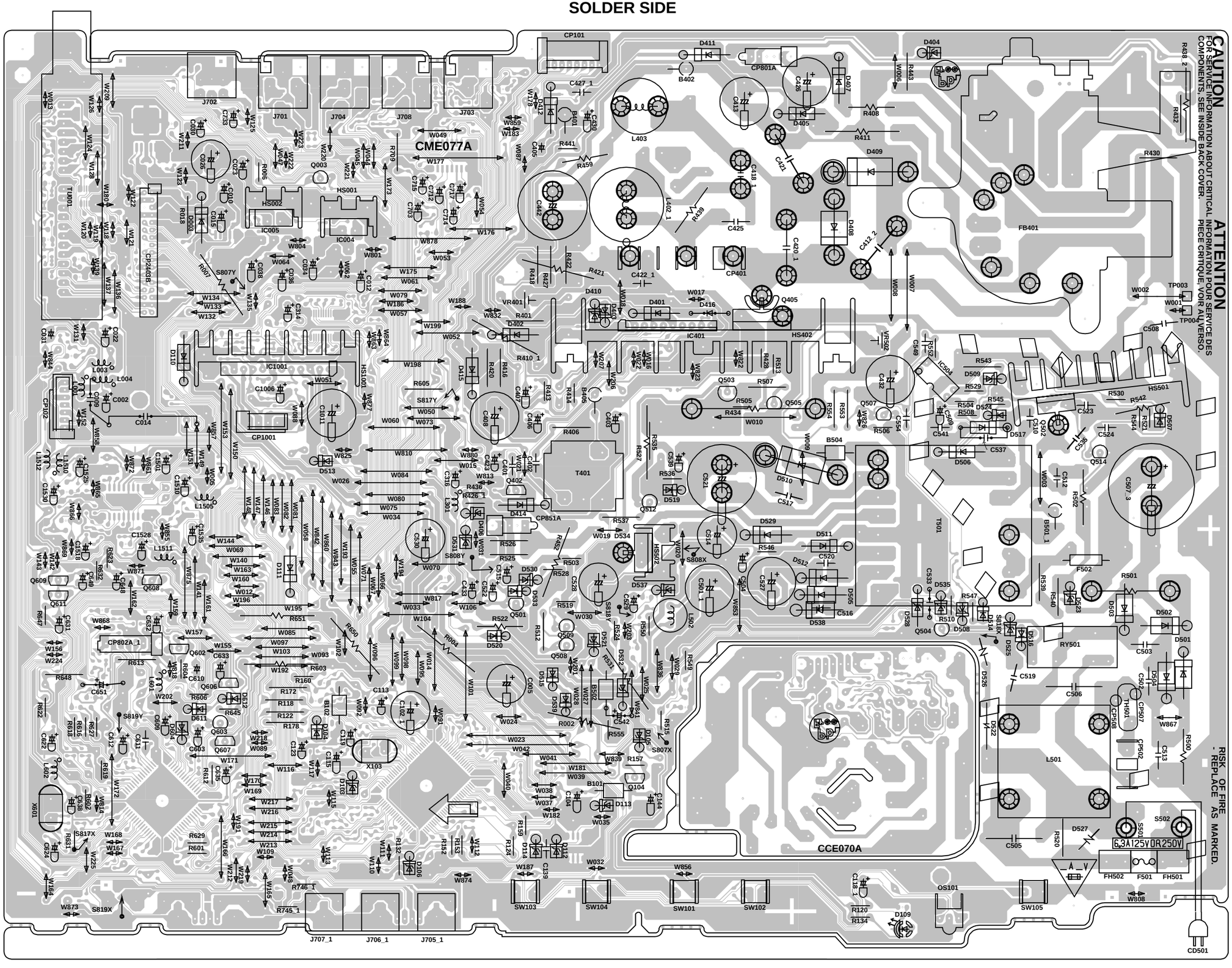
CAUTION
FOR SERVICE INFORMATION ABOUT CRITICAL COMPONENTS. SEE INSIDE BACK COVER.
ATTENTION
INFORMATION POUR SERVICE DES PIECE CRITIQUE. VOIR AU VERSO.
CME077A
CCE070A
RISK OF FIRE - REPLACE AS MARKED.
6.3A125V0R250V
CP101
CP1001
CP102
CP401
CP801A
CP802A_1
CP2403E
J701
J702
J703
J704
J708
HS001
HS002
HS402
HS501
HS502
IC004
IC005
IC401
IC1001
IC5304
T401
T501
L403
L402_1
L501
L502
L602
L1505
L1511
L1512
L1530
FB401
RY501
X103
X601
SW101
SW102
SW103
SW104
SW105
OS101
CD501
TU001
TP003
TP004
S807Y
S808Y
S808X
S817X
S818X
S819Y
S819X
S807X
S502
FH501
FH502
F501
F502
B101
B102
B401
B402
B502
B504
B1501_1
D109
D113
D401
D402
D403
D404
D405
D407
D408
D409
D410
D411
D416
D501
D502
D503
D505
D506
D507
D509
D510
D511
D512
D517
D519
D523
D524
D525
D526
D527
D528
D529
D534
D535
D538
Q005
Q104
Q402
Q405
Q501
Q503
Q504
Q505
Q507
Q512
Q514
Q602
Q603
Q606
Q607
Q608
Q609
Q611
Q1001
Q1002
Q1003
Q1004
Q1005
Q1006
Q1007
Q1008
Q1009
Q1010
Q1011
Q1012
Q1013
Q1014
Q1015
Q1016
Q1017
Q1018
Q1019
Q1020
Q1021
Q1022
Q1023
Q1024
Q1025
Q1026
Q1027
Q1028
Q1029
Q1030
Q1031
Q1032
Q1033
Q1034
Q1035
Q1036
Q1037
Q1038
Q1039
Q1040

PRINTED CIRCUIT BOARDS
MAIN (CHIP MOUNTED PARTS)
SOLDER SIDE

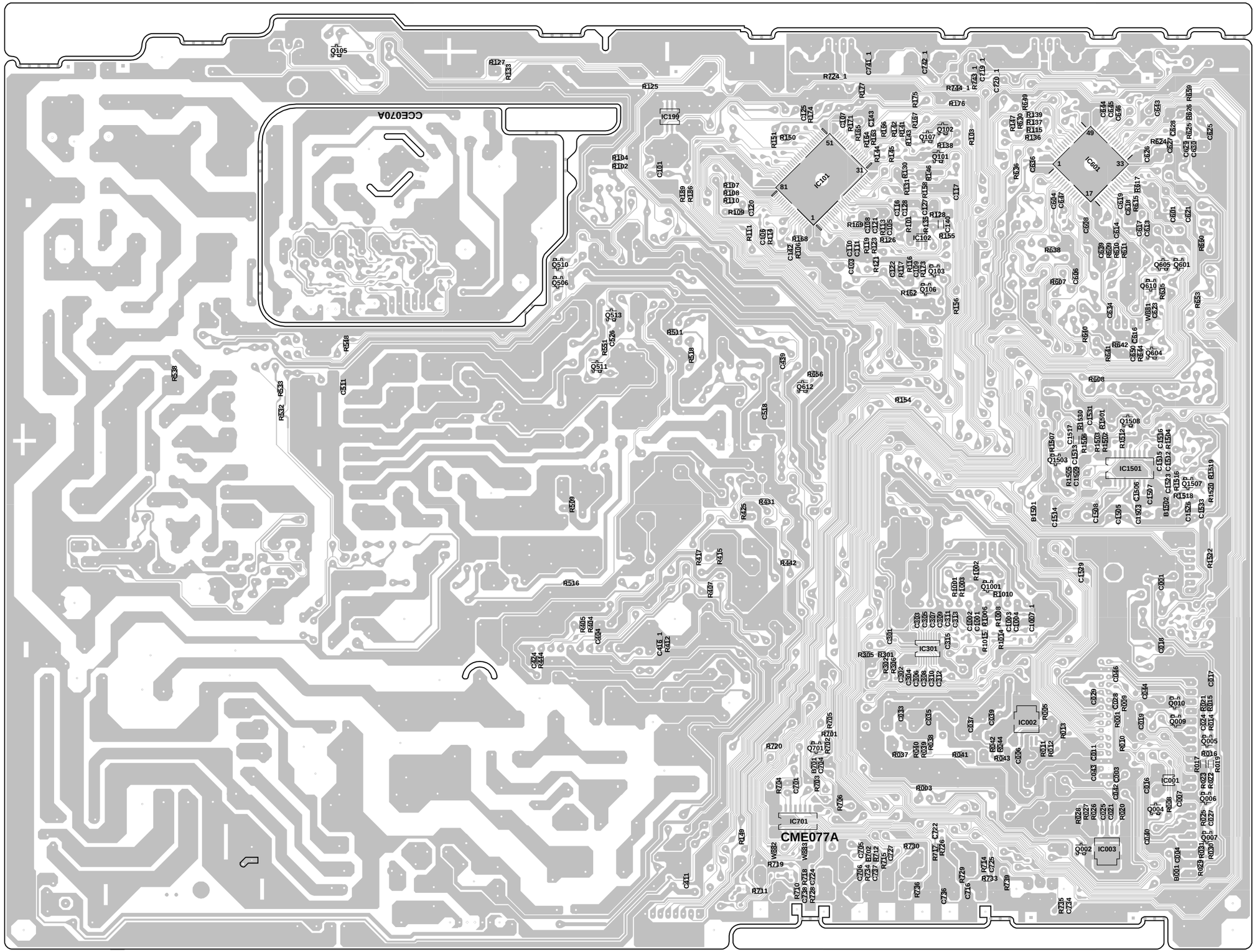

PRINTED CIRCUIT BOARDS

CRT/VM COIL
SOLDER SIDE

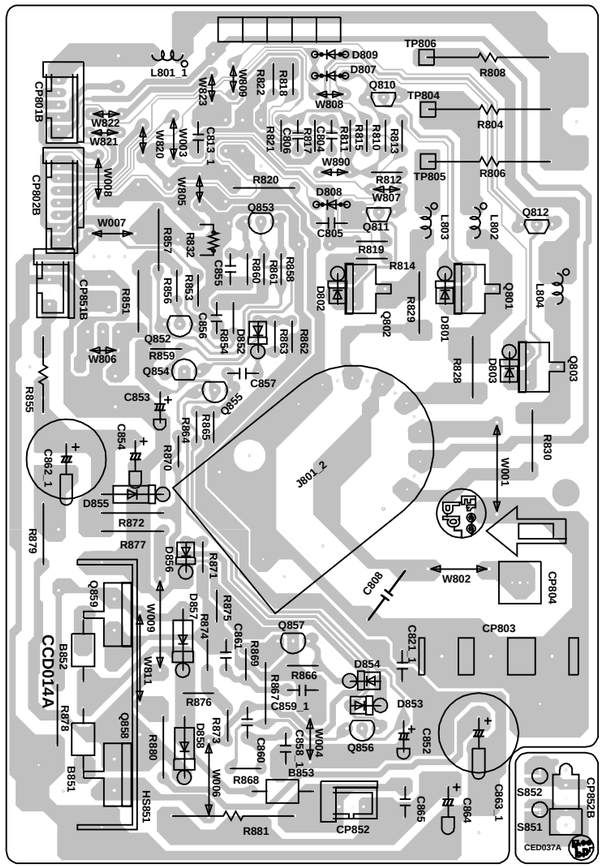

DIGITAL (TOP SIDE)

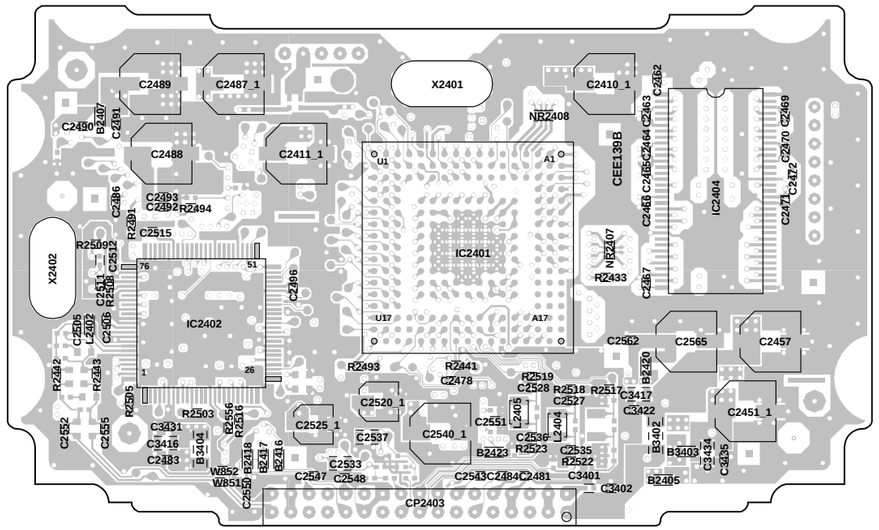

DIGITAL (BOTTOM SIDE)

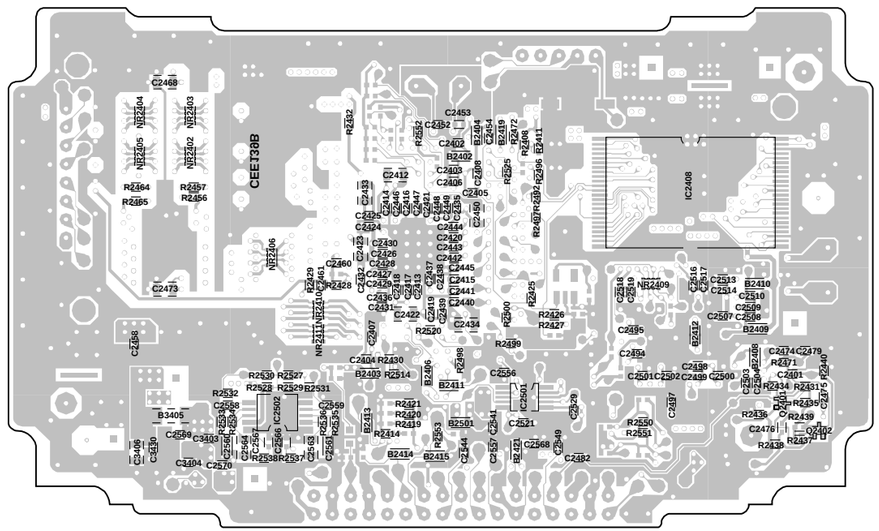

MICON SCHEMATIC DIAGRAM
(MAIN PCB)

EEP ROM IC 128K
IC199 AT24C128N-10SU-1.8

MICON IC
IC101
OEC7144A

RESET IC
IC102 PST3229NR

ACCESSORY
BT001 MNAAA(R03)
BT002 MNAAA(R03)
TM101 ORT204N7404359-U

NOTE: THIS SCHEMATIC DIAGRAM IS THE LATEST AT THE TIME OF PRINTING AND SUBJECT TO CHANGE WITHOUT NOTICE 。

NOTE: THE DC VOLTAGE AT EACH PART WAS MEASURED WITH THE DIGITAL TESTER WHEN THE COLOR BROADCAST WAS RECEIVED IN GOOD CONDITION AND PICTURE IS NORMAL.

PCB070
CME077

CHROMA SCHEMATIC DIAGRAM

(MAIN PCB)

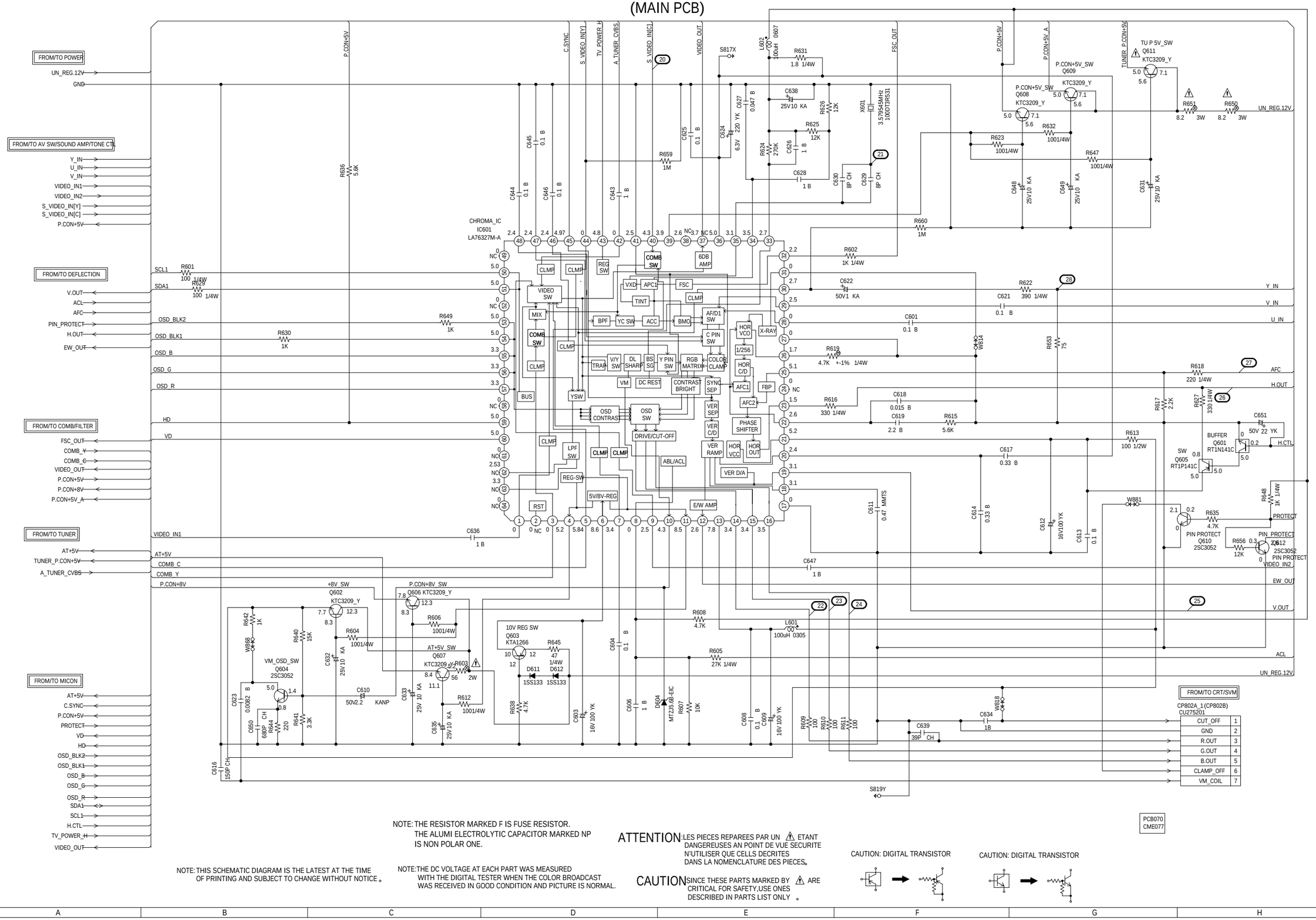

NOTE: THE RESISTOR MARKED F IS FUSE RESISTOR.
THE ALUMI ELECTROLYTIC CAPACITOR MARKED NP IS NON POLAR ONE.

NOTE: THIS SCHEMATIC DIAGRAM IS THE LATEST AT THE TIME OF PRINTING AND SUBJECT TO CHANGE WITHOUT NOTICE 。

NOTE: THE DC VOLTAGE AT EACH PART WAS MEASURED WITH THE DIGITAL TESTER WHEN THE COLOR BROADCAST WAS RECEIVED IN GOOD CONDITION AND PICTURE IS NORMAL.

ATTENTION: LES PIECES REPAREES PAR UN ⚠ ETANT DANGEREUSES AN POINT DE VUE SECURITE N°UTILISER QUE CELLS DECRITES DANS LA NOMENCLATURE DES PIECES。

CAUTION: SINCE THESE PARTS MARKED BY ⚠ ARE CRITICAL FOR SAFETY,USE ONES DESCRIBED IN PARTS LIST ONLY 。

CAUTION: DIGITAL TRANSISTOR

CAUTION: DIGITAL TRANSISTOR

DEFLECTION SCHEMATIC DIAGRAM
(MAIN PCB)

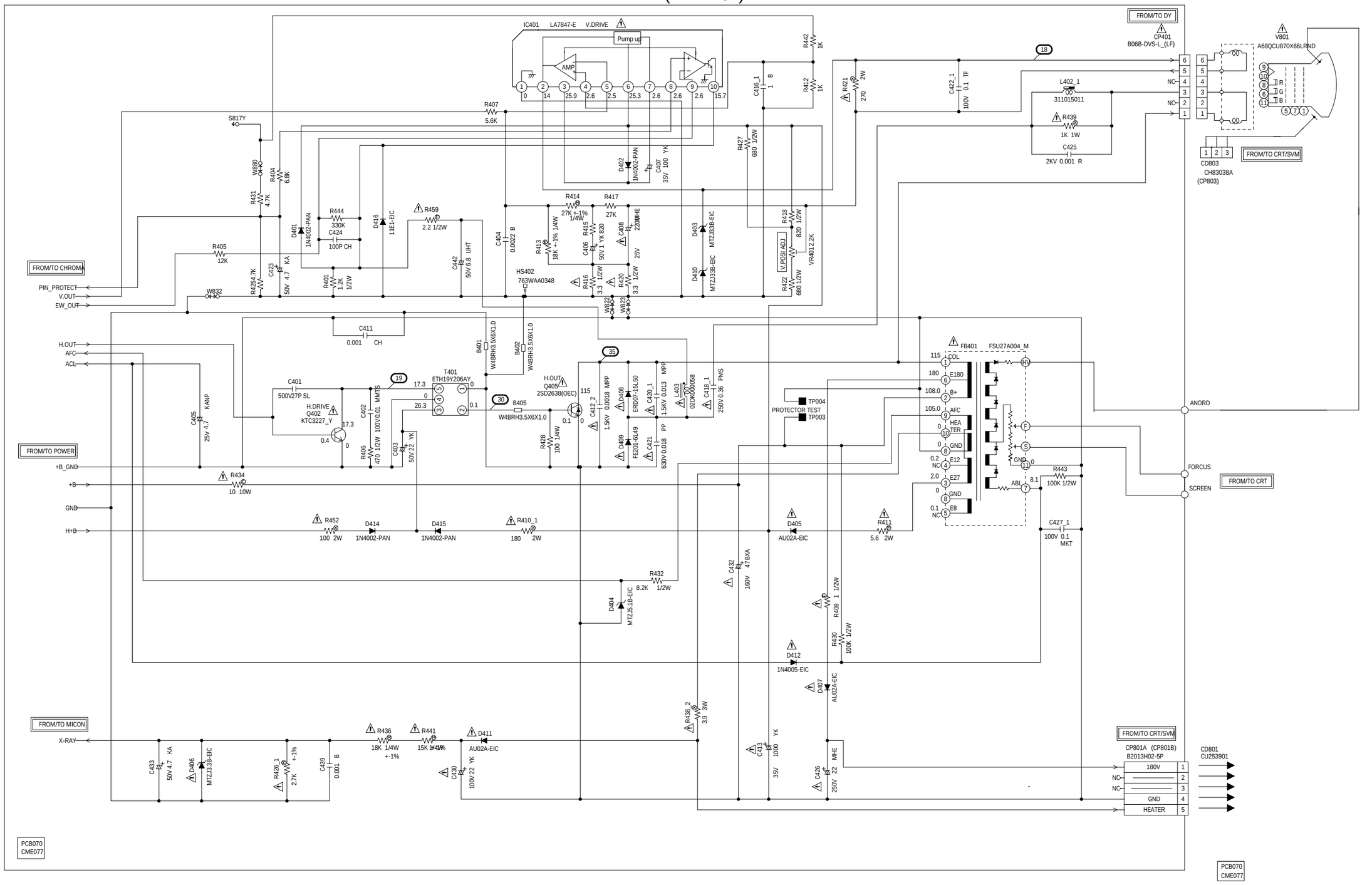

NOTE: THE DC VOLTAGE AT EACH PART WAS MEASURED WITH THE DIGITAL TESTER WHEN THE COLOR BROADCAST WAS RECEIVED IN GOOD CONDITION AND PICTURE IS NORMAL.

NOTE: THIS SCHEMATIC DIAGRAM IS THE LATEST AT THE TIME OF PRINTING AND SUBJECT TO CHANGE WITHOUT NOTICE 。

NOTE: THE RESISTOR MARKED F IS FUSE RESISTOR. THE ALUMI ELECTROLYTIC CAPACITOR MARKED NP IS NON POLAR ONE.

CAUTION SINCE THESE PARTS MARKED BY ⚠ ARE CRITICAL FOR SAFETY,USE ONES DESCRIBED IN PARTS LIST ONLY 。

ATTENTION: LES PIECES REPAREES PAR UN ⚠ ETANT DANGEREUSES AN POINT DE VUE SECURITE N'UTILISER QUE CELLS DECRITES DANS LA NOMENCLATURE DES PIECES。

POWER SCHEMATIC DIAGRAM

(MAIN PCB)

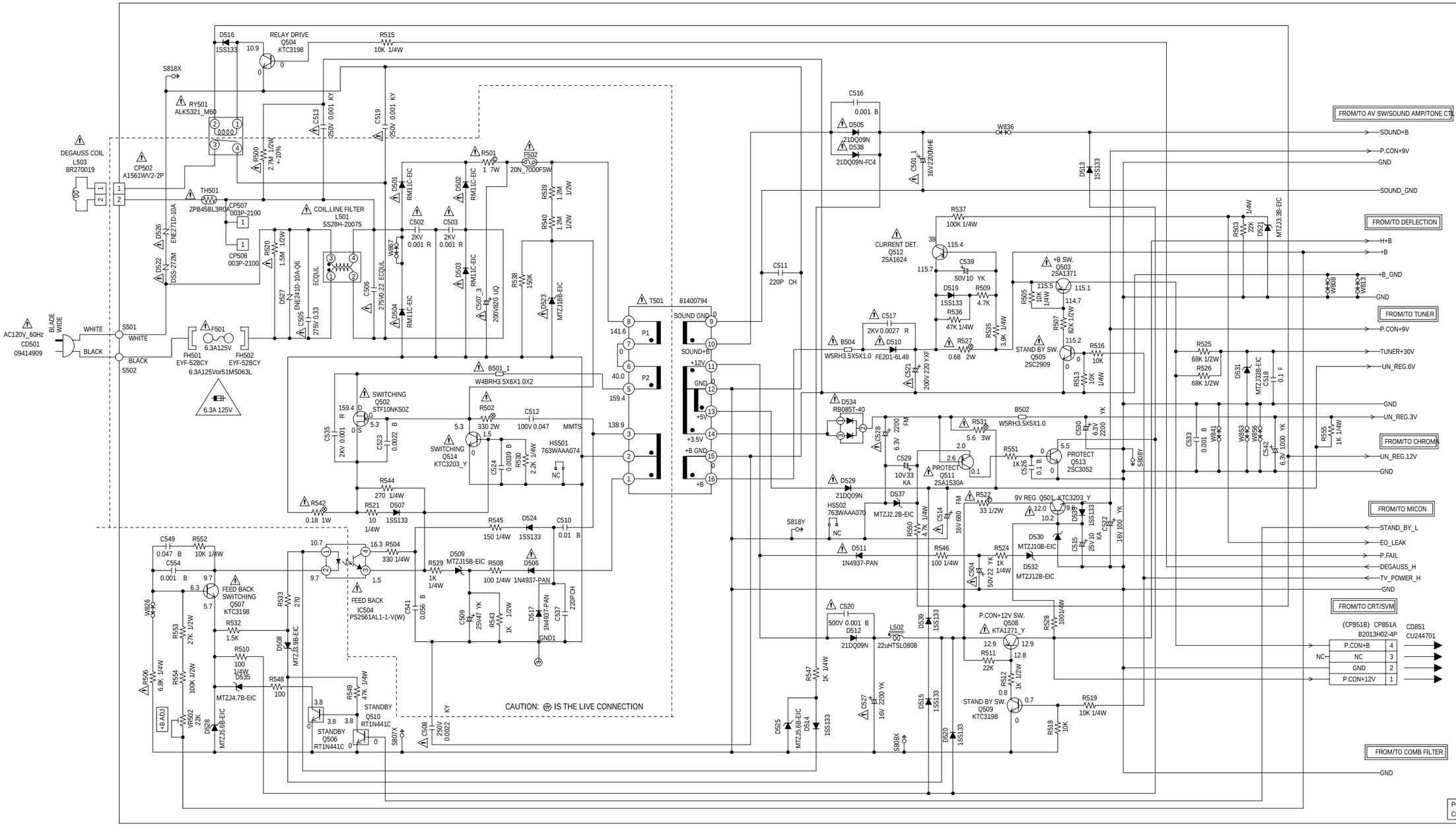

6.3A 125V 7A 250V

CAUTION: FOR CONTINUED PROTECTION AGAINST FIRE HAZARD, REPLACE ONLY WITH THE SAME TYPE FUSE
6.3A 125V(F501) , 7A 250V(F502) AND 5A 125V (F503)

ATTENTION: POUR UNE PROTECTION CONTINUE LES RISQUES D'INCEIE N'UTILISER QUE DES FUSIBLE DE MEME TYPE
6.3A 125V(F501) 7A 250V(F502) ET 5A 125V (F503)

CAUTION: F502 AND F503 ARE MANUFACTURED BY SKYGETE CO.,LTD TYPE 20N

NOTE: THE RESISTOR MARKED F IS FUSE RESISTOR.
THE ALUMI ELECTROLYTIC CAPACITOR MARKED NP IS NON POLAR ONE.

NOTE: THIS SCHEMATIC DIAGRAM IS THE LATEST AT THE TIME OF PRINTING AND SUBJECT TO CHANGE WITHOUT NOTICE 。

NOTE: THE DC VOLTAGE AT EACH PART WAS MEASURED WITH THE DIGITAL TESTER WHEN THE COLOR BROADCAST WAS RECEIVED IN GOOD CONDITION AND PICTURE IS NORMAL.

CAUTION: DIGITAL TRANSISTOR

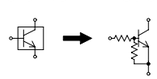

ATTENTION: LES PIECES REPAREES PAR UN ⚠ ETANT DANGEREUSES AN POINT DE VUE SECURITE N'UTILISER QUE CELLS DECRITES DANS LA NOMENCLATURE DES PIECES。

CAUTION: SINCE THESE PARTS MARKED BY ⚠ ARE CRITICAL FOR SAFETY,USE ONES DESCRIBED IN PARTS LIST ONLY 。

TUNER SCHEMATIC DIAGRAM

(MAIN PCB)

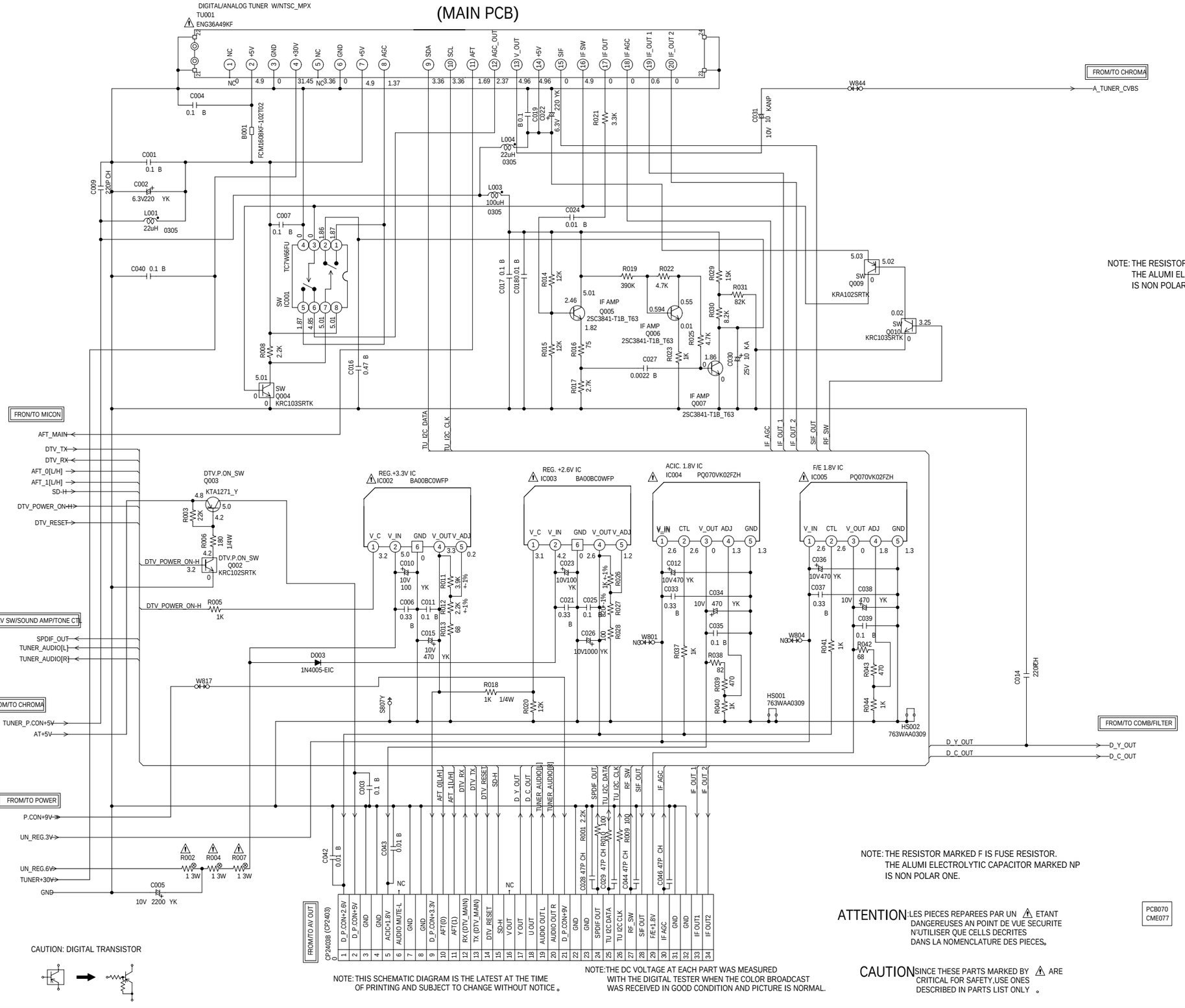

AV SW/SOUND AMP/TONE CTL SCHEMATIC DIAGRAM

(MAIN PCB)

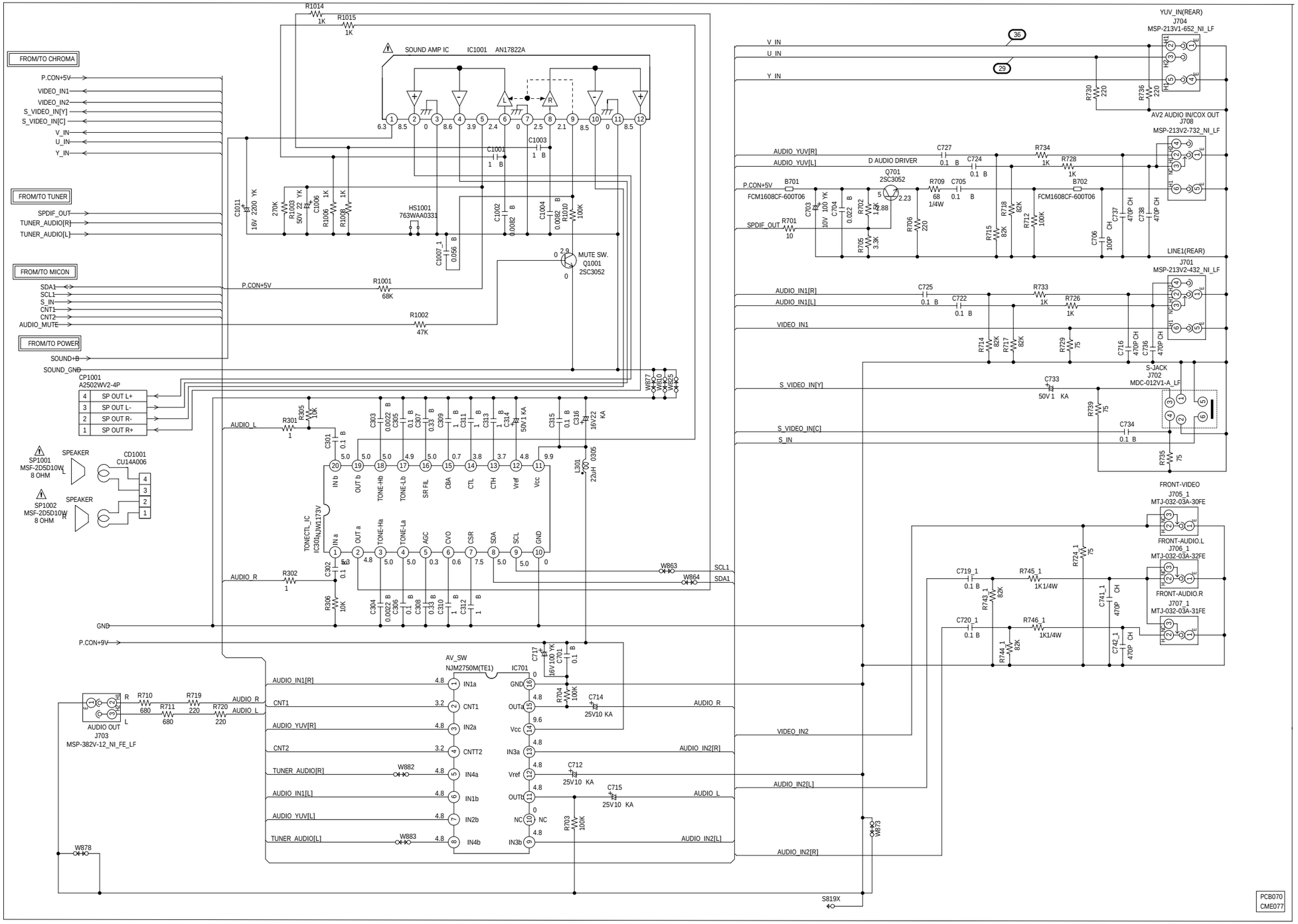

NOTE: THIS SCHEMATIC DIAGRAM IS THE LATEST AT THE TIME OF PRINTING AND SUBJECT TO CHANGE WITHOUT NOTICE 。

NOTE: THE DC VOLTAGE AT EACH PART WAS MEASURED WITH THE DIGITAL TESTER WHEN THE COLOR BROADCAST WAS RECEIVED IN GOOD CONDITION AND PICTURE IS NORMAL.

CAUTION SINCE THESE PARTS MARKED BY ⚠ ARE CRITICAL FOR SAFETY,USE ONES DESCRIBED IN PARTS LIST ONLY 。

ATTENTION: LES PIECES REPAREES PAR UN ⚠ ETANT DANGEREUSES AN POINT DE VUE SECURITE N'UTILISER QUE CELLS DECRITES DANS LA NOMENCLATURE DES PIECES。

COMB FILTER SCHEMATIC DIAGRAM

(MAIN PCB)

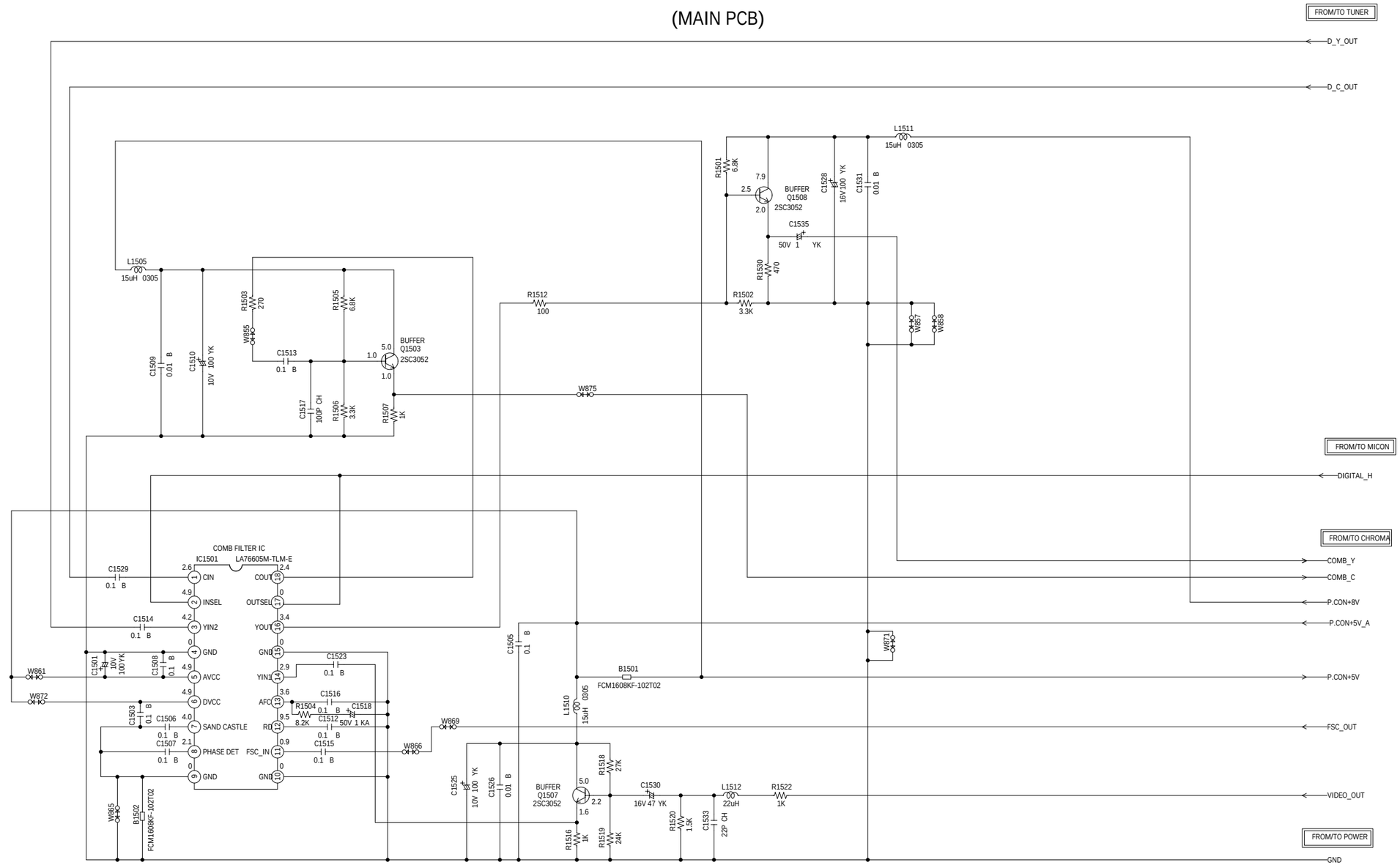

NOTE: THIS SCHEMATIC DIAGRAM IS THE LATEST AT THE TIME OF PRINTING AND SUBJECT TO CHANGE WITHOUT NOTICE 。

NOTE:THE DC VOLTAGE AT EACH PART WAS MEASURED WITH THE DIGITAL TESTER WHEN THE COLOR BROADCAST WAS RECEIVED IN GOOD CONDITION AND PICTURE IS NORMAL.

ASIC SCHEMATIC DIAGRAM

(DIGITAL PCB)

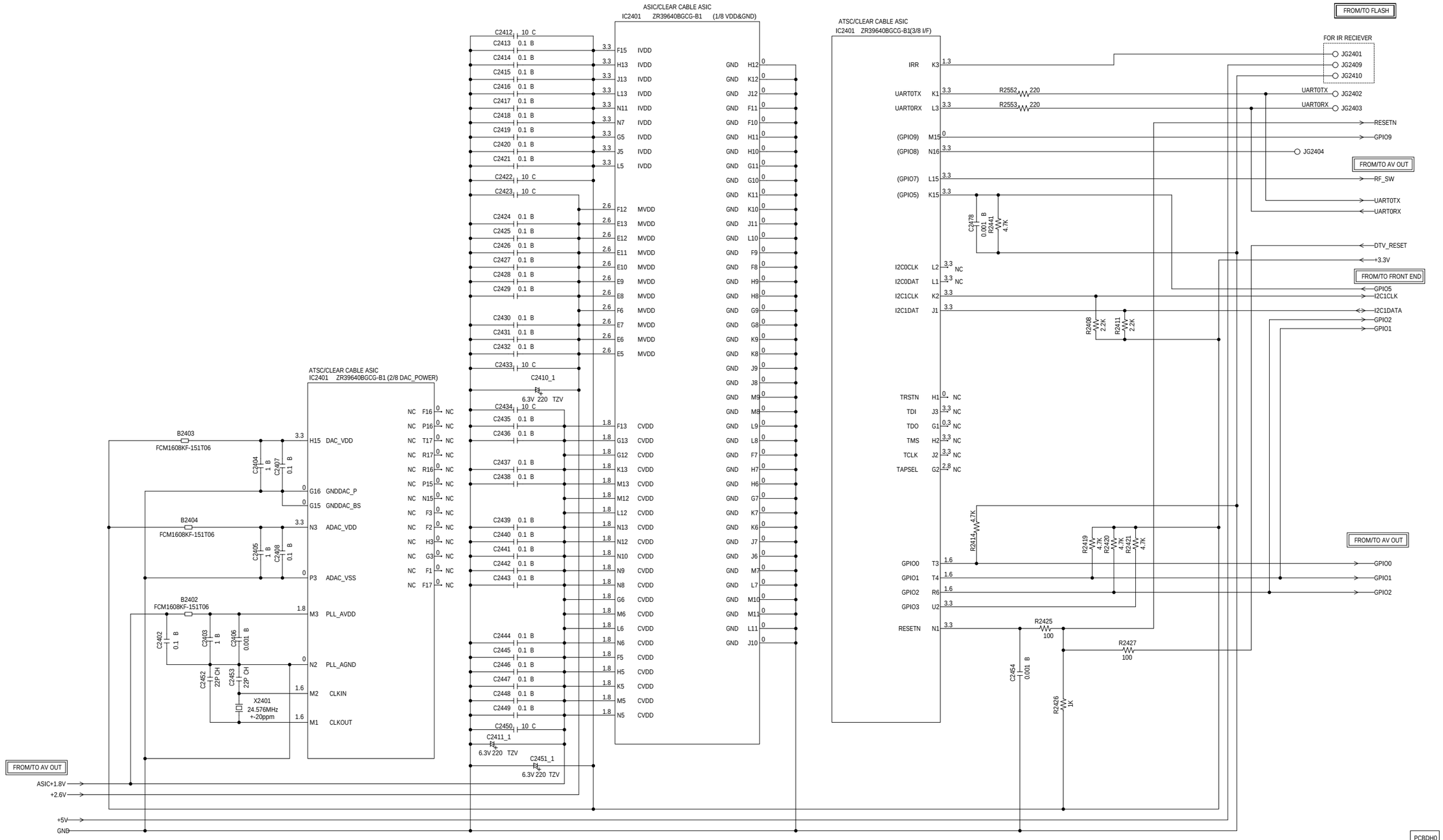

NOTE: THIS SCHEMATIC DIAGRAM IS THE LATEST AT THE TIME OF PRINTING AND SUBJECT TO CHANGE WITHOUT NOTICE 。

NOTE:THE DC VOLTAGE AT EACH PART WAS MEASURED WITH THE DIGITAL TESTER WHEN THE COLOR BROADCAST WAS RECEIVED IN GOOD CONDITION AND PICTURE IS NORMAL.

SDRAM SCHEMATIC DIAGRAM

(DIGITAL PCB)

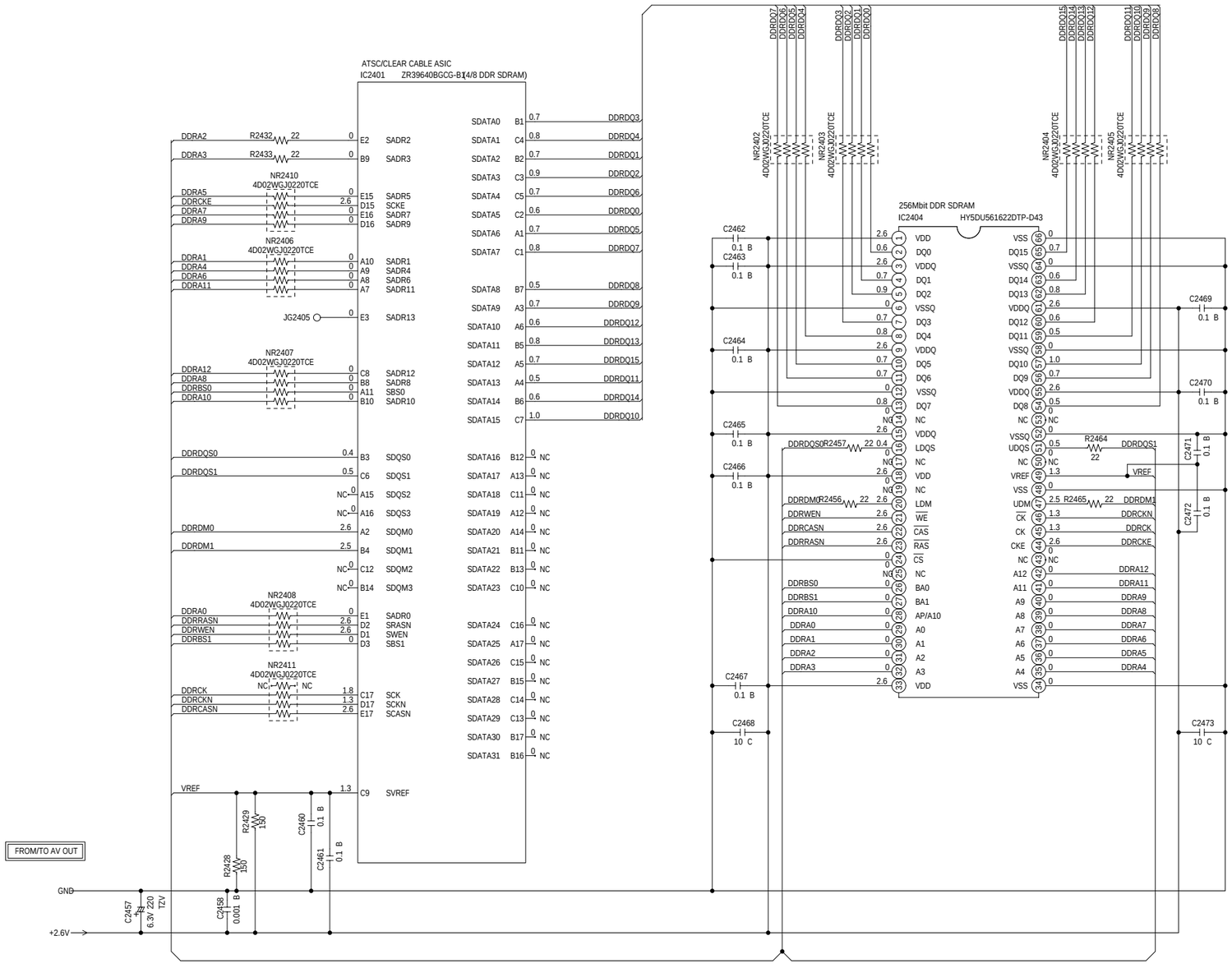

NOTE: THIS SCHEMATIC DIAGRAM IS THE LATEST AT THE TIME OF PRINTING AND SUBJECT TO CHANGE WITHOUT NOTICE。

NOTE:THE DC VOLTAGE AT EACH PART WAS MEASURED WITH THE DIGITAL TESTER WHEN THE COLOR BROADCAST WAS RECEIVED IN GOOD CONDITION AND PICTURE IS NORMAL.

FLASH SCHEMATIC DIAGRAM

(DIGITAL PCB)

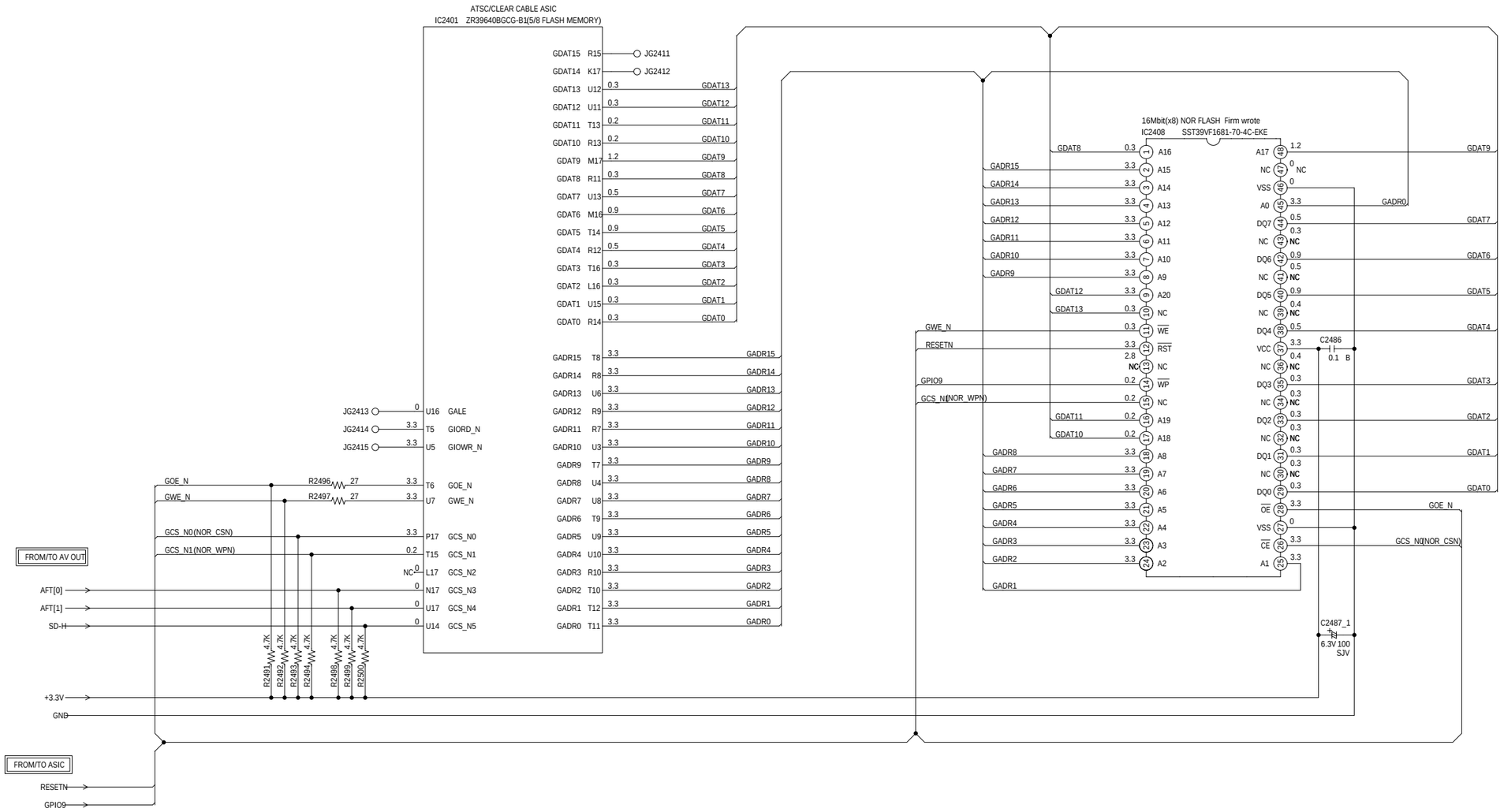

NOTE: THIS SCHEMATIC DIAGRAM IS THE LATEST AT THE TIME OF PRINTING AND SUBJECT TO CHANGE WITHOUT NOTICE。

NOTE:THE DC VOLTAGE AT EACH PART WAS MEASURED WITH THE DIGITAL TESTER WHEN THE COLOR BROADCAST WAS RECEIVED IN GOOD CONDITION AND PICTURE IS NORMAL.

FRONT END SCHEMATIC DIAGRAM

(DIGITAL PCB)

FROM/TO AV OUT

IF_OUT1_P

IF_OUT2_N

C2552 0.01 B

C2555 0.01 B

R2442 100

R2443 100

C2401 0.1 B

R2471 47

B2408 FCM1608KF-151T06

C2503 1 B

C2504 0.1 B

C2479 100P CH

C2505 56P CH

L2402 0.22uH

B2409 FCM1608KF-151T06

B2410 FCM1608KF-151T06

C2511 18P CH

C2512 18P CH

X2402 25.000MHz +-50ppm

R2509 100

C2508 1 B

C2509 0.1 B

C2510 0.1 B

R2508 1M

C2513 0.1 B

C2514 1 B

R2505 4.7K

C2474 0.1 B

C2506 0.1 B

C2507 0.1 B

+5V

R2431 4W 6.8K

R2435 4W 560

R2437 4W 6.8K

R2439 4W 220

C2476 0.1 B

AMP Q2402 KTC4075E-Y-RTK/P

SIF

AMP Q2401 KTC4075E-Y-RTK/P

R2434 4W 1.8K

C2475 1 B

R2436 4W 100

R2438 4W 6.8K

R2440 4W 750

C2500 0.001 B

C2498 0.1 B

C2499 1 B

IF_AGC

R2503 2.2K

C2497 0.1 B

TU_DATA

R2556 100

C2502 0.1 B

TU_CLK

R2516 100

I2C1CLK

I2C1DATA

C2501 0.001 B

| | | |

AV OUT SCHEMATIC DIAGRAM
(DIGITAL PCB)

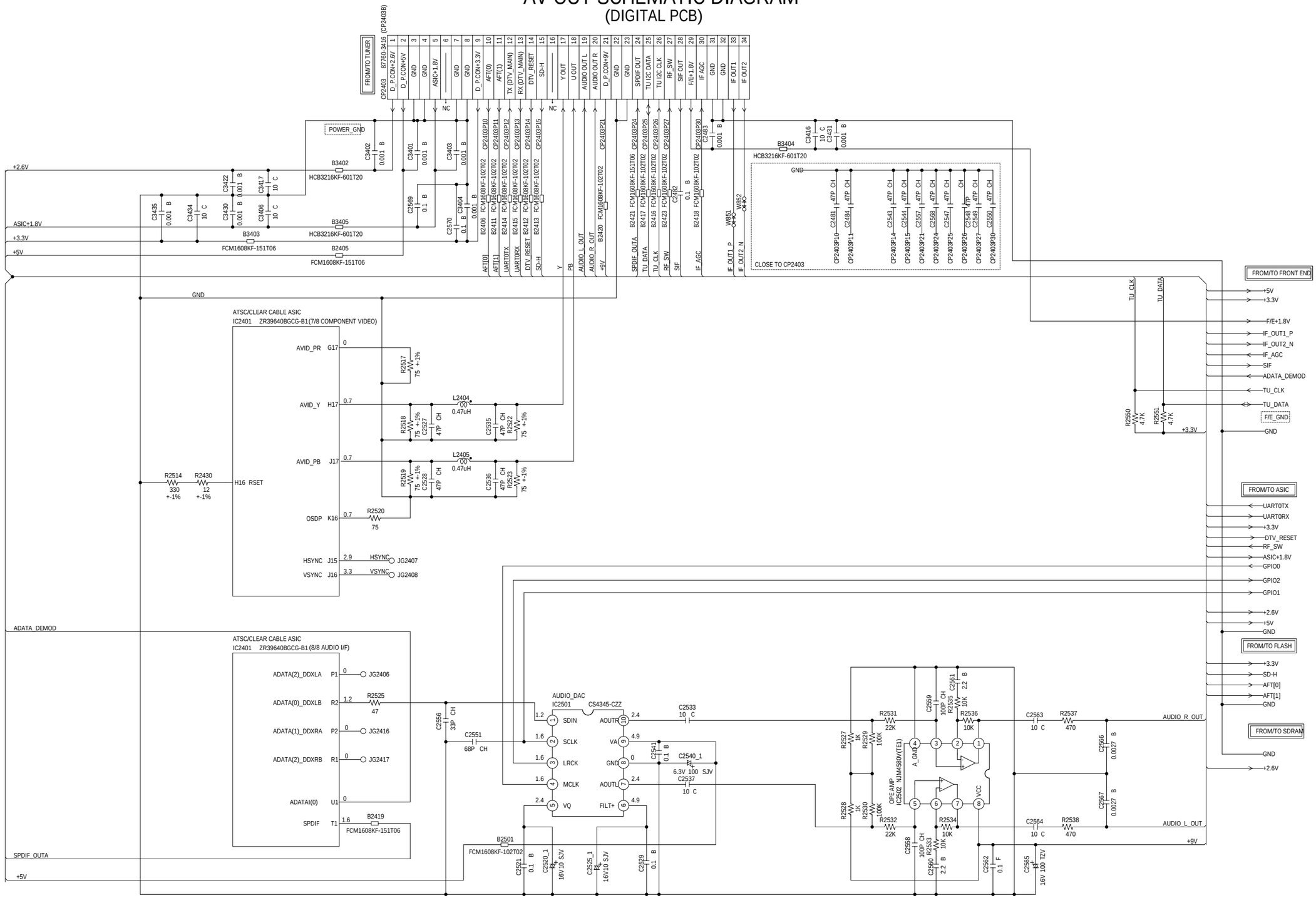

NOTE: THIS SCHEMATIC DIAGRAM IS THE LATEST AT THE TIME OF PRINTING AND SUBJECT TO CHANGE WITHOUT NOTICE。

NOTE: THE DC VOLTAGE AT EACH PART WAS MEASURED WITH THE DIGITAL TESTER WHEN THE COLOR BROADCAST WAS RECEIVED IN GOOD CONDITION AND PICTURE IS NORMAL.

CRT/SVM SCHEMATIC DIAGRAM (CRT PCB)

CRT BLOCK

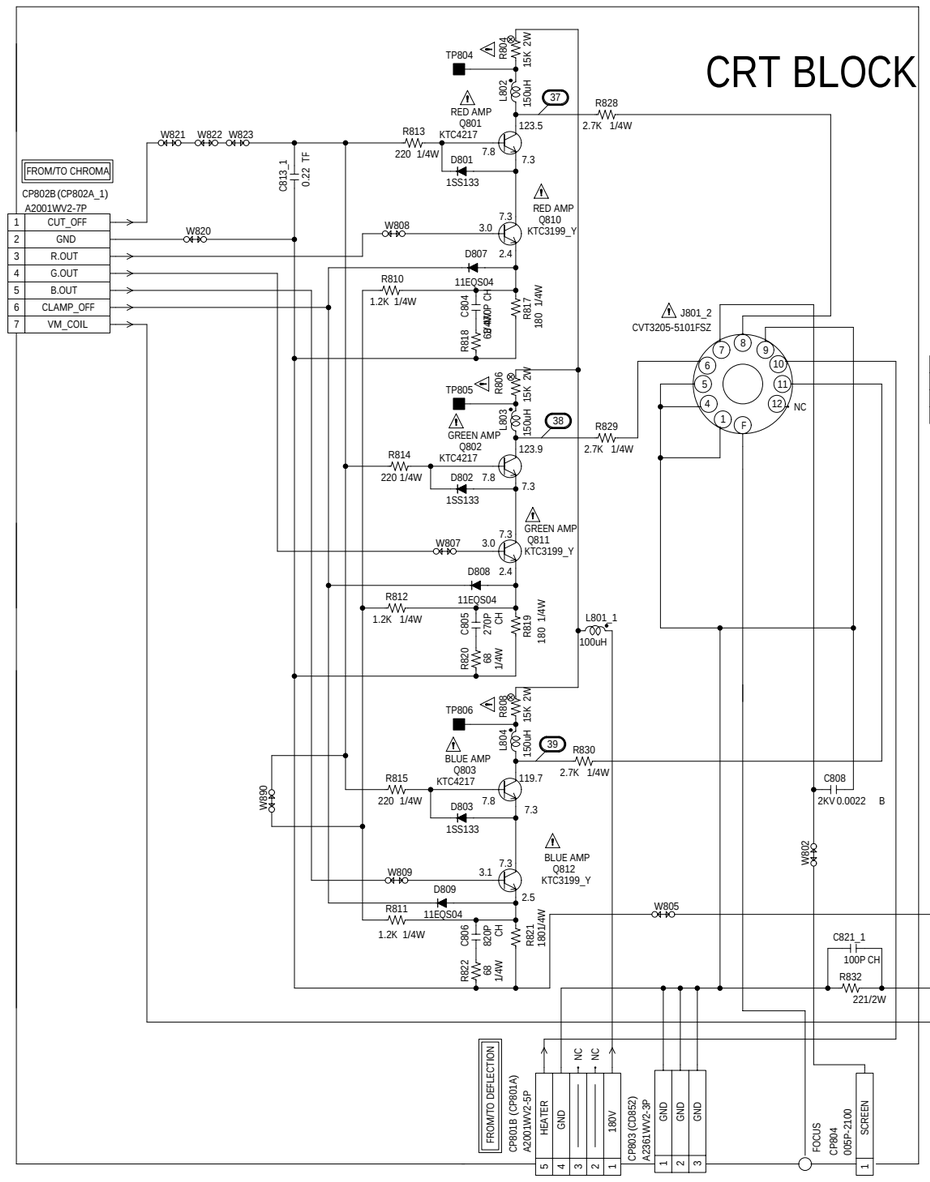

SVM BLOCK

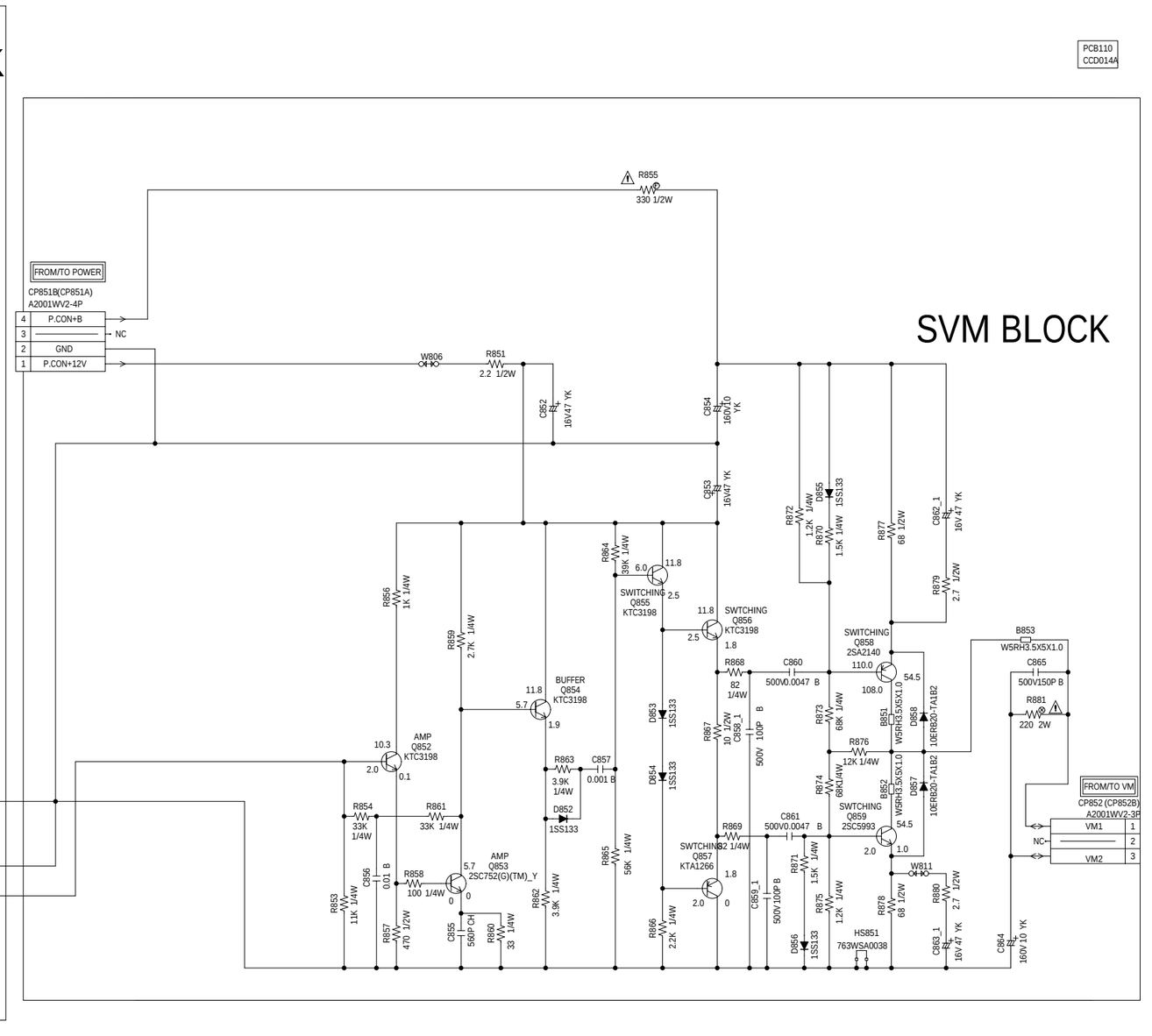

(VM COIL PCB)

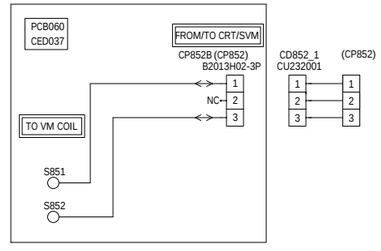

NOTE: THE RESISTOR MARKED F IS FUSE RESISTOR.
THE ALUMI ELECTROLYTIC CAPACITOR MARKED NP IS NON POLAR ONE.

NOTE: THE DC VOLTAGE AT EACH PART WAS MEASURED WITH THE DIGITAL TESTER WHEN THE COLOR BROADCAST WAS RECEIVED IN GOOD CONDITION AND PICTURE IS NORMAL.

NOTE: THIS SCHEMATIC DIAGRAM IS THE LATEST AT THE TIME OF PRINTING AND SUBJECT TO CHANGE WITHOUT NOTICE。

CAUTION SINCE THESE PARTS MARKED BY ⚠ ARE CRITICAL FOR SAFETY,USE ONES DESCRIBED IN PARTS LIST ONLY 。

ATTENTION: LES PIECES REPAREES PAR UN ⚠ ETANT DANGEREUSES AN POINT DE VUE SECURITE N'UTILISER QUE CELLS DECRITES DANS LA NOMENCLATURE DES PIECES。

INTERCONNECTION DIAGRAM

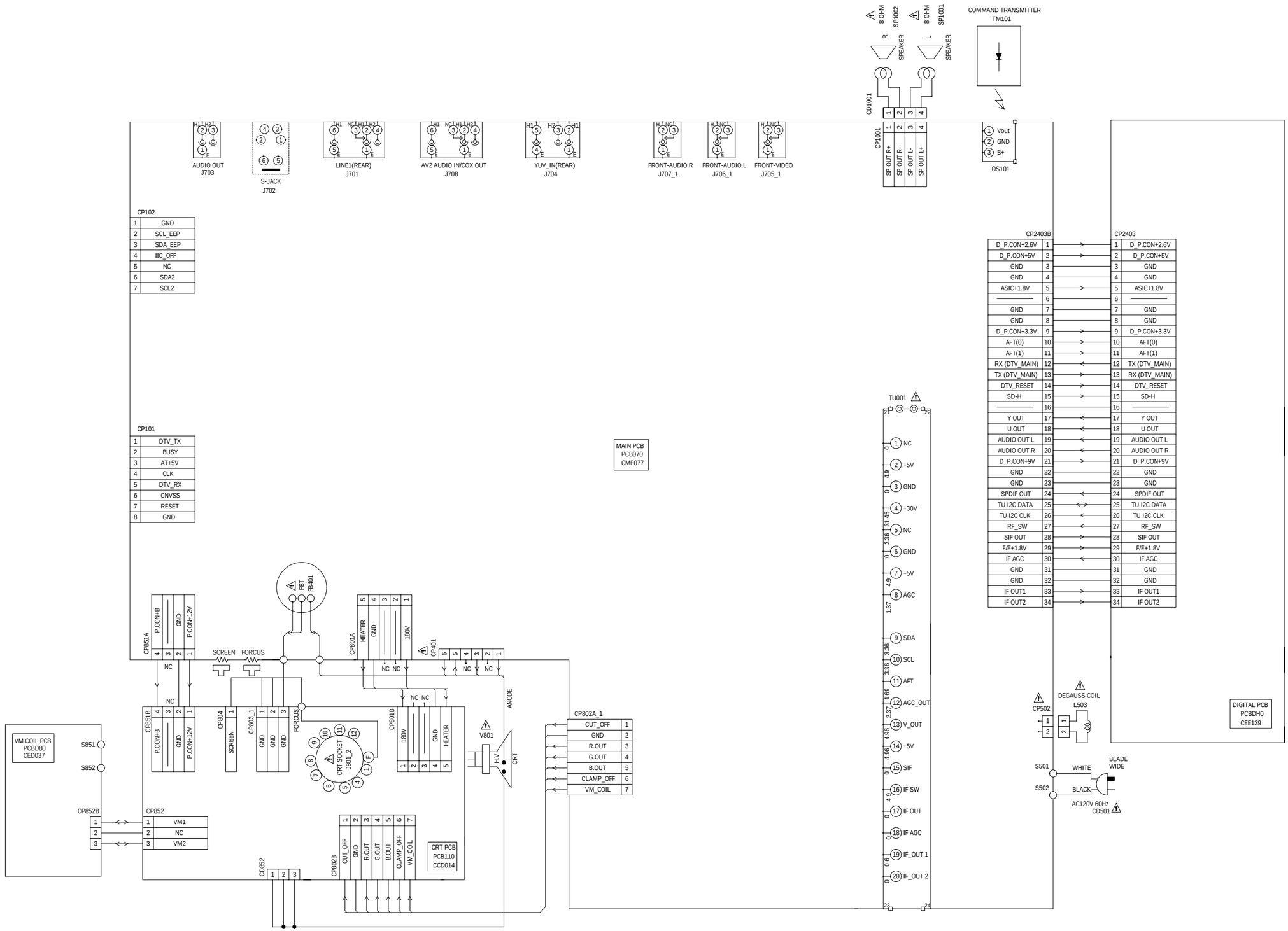

NOTE: THIS INTERCONNECTION DIAGRAM IS THE LATEST AT THE TIME OF PRINTING AND SUBJECT TO CHANGE WITHOUT NOTICE 。

ATTENTION: LES PIECES REPAREES PAR UN ⚠ ETANT DANGEREUSES AN POINT DE VUE SECURITE N'UTILISER QUE CELLS DECRITES DANS LA NOMENCLATURE DES PIECES。

CAUTION SINCE THESE PARTS MARKED BY ⚠ ARE CRITICAL FOR SAFETY,USE ONES DESCRIBED IN PARTS LIST ONLY 。

WAVEFORMS

POWER ON
5ms
10.0V

⑱

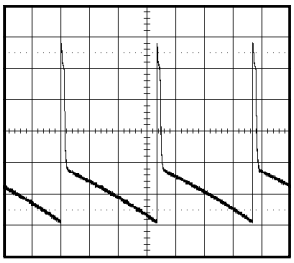

20µs
2V

㉓

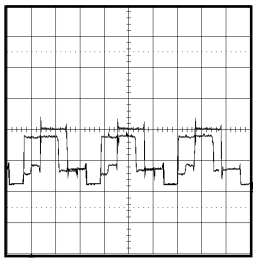

10µs
200mV

㉘

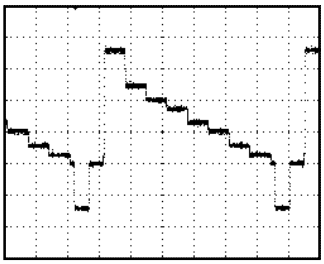

DEFLECTION

20µs
20V

⑲

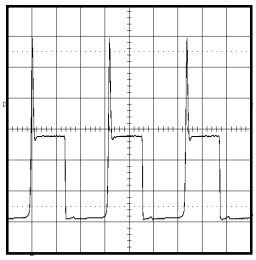

20µs
2V

㉔

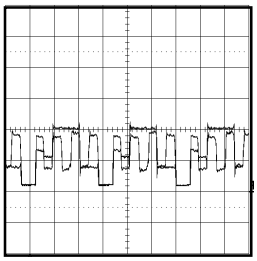

AV/SOUND

20µs
200mV

㉙

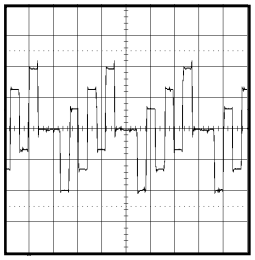

10µs
200mV

⑳

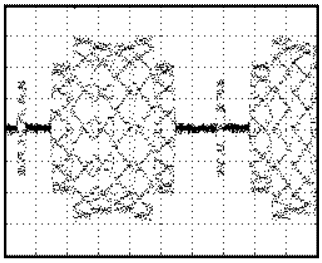

10ms
0.5V

㉕

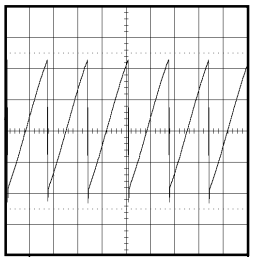

DEFLECTION

20µs
2V

㉚

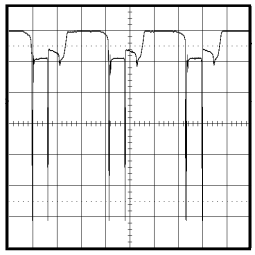

CHROMA/IF

2µs
1V

㉑

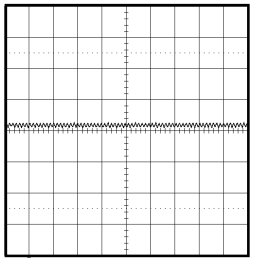

50µs
1V

㉖

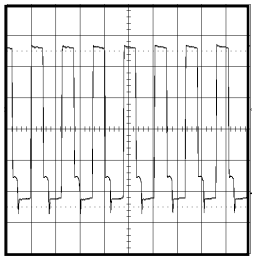

MICON

50µs
1V

㉝

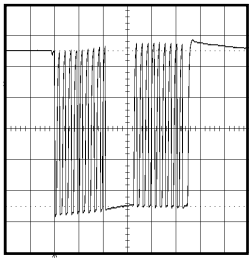

20µs
1V

㉒

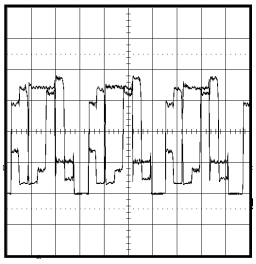

20µs
2V

㉗

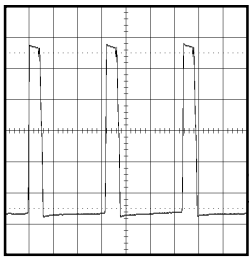

0.1ms
1V

㉞

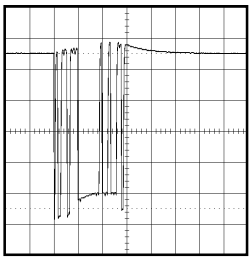

NOTE: The following waveforms were measured at the point of the corresponding balloon number in the schematic diagram.

WAVEFORMS

DEFLECTION

50µs
200V

(35)

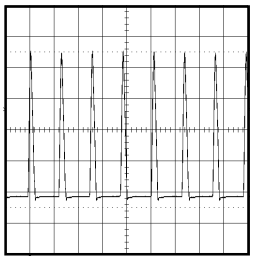

AV/SOUND

20µs
200mV

(36)

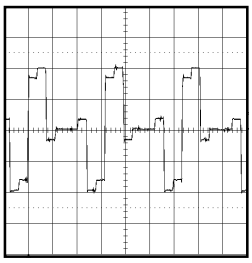

CRT/SVM

20µs
50V

(37)

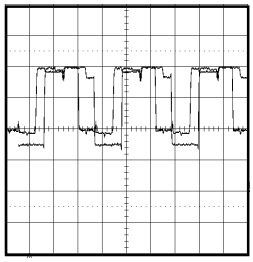

20µs
50V

(38)

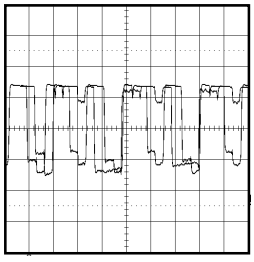

20µs
50V

(39)

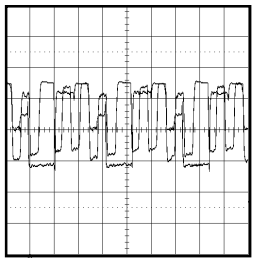

NOTE: The following waveforms were measured at the point of the corresponding balloon number in the schematic diagram.

MECHANICAL EXPLODED VIEW

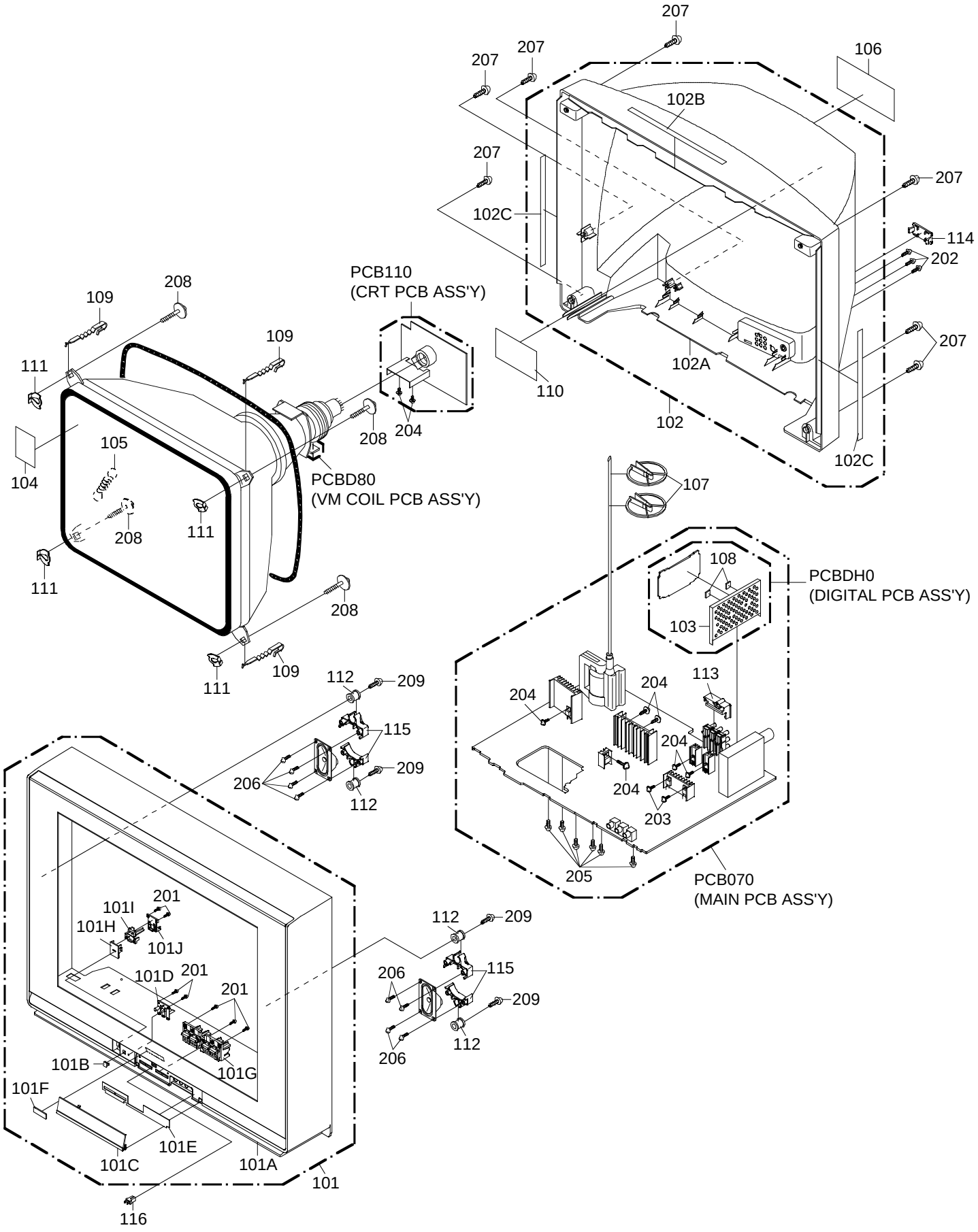

MECHANICAL EXPLODED VIEW
(PACKING DIAGRAM)

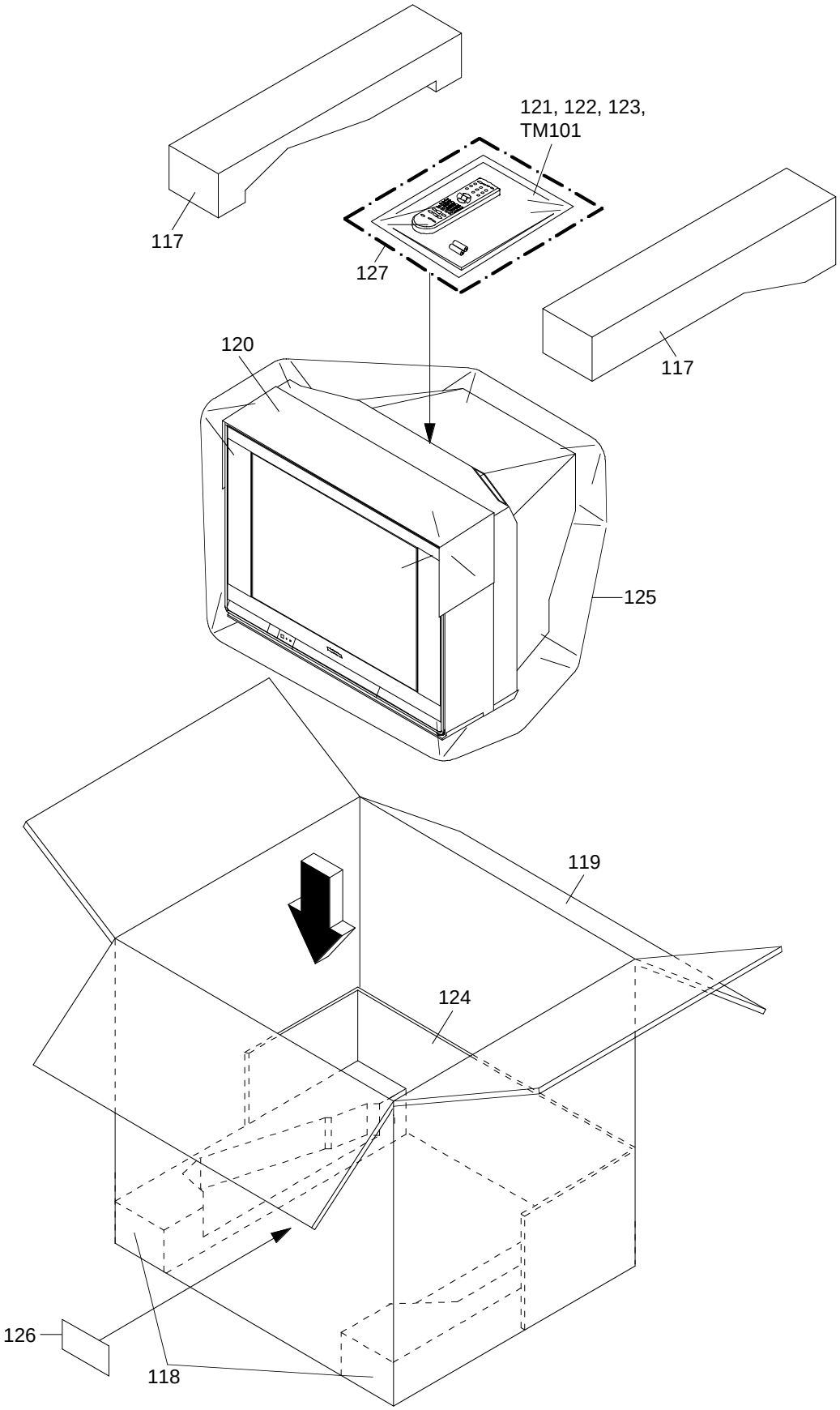

MECHANICAL REPLACEMENT PARTS LIST

Location No.	TSB P/N	Reference No.	Description
101	72783332	7A7010184A	FRONT CABI ASS'Y
101A	72783333	701WPJ1404	CABINET,FRONT
101B	72794709	711WPA0239	PLATE,FRONT
101C	72783334	712WPJ0956	DOOR
101D	72795045	713WPAA228	GUIDE,REMOCON
101E	72783335	7235490076	AV,LABEL
101F	72781985	7235490036	BADGE,BRAND
101G	72783336	735WPB0335	BUTTON,FRAME
101H	72783337	735WPJ0250	BUTTON,POWER
101I	72783338	738WPA0184	BUTTON,FRAME
101J	72783339	738WPA0185	STOPPER,BUTTON
102	72783340	7A7020069A	BACK,CABI ASS'Y
102A	72783341	702WPA1214	CABINET,BACK
102B	72781222	800WQ0A092	FELT SHEET
102C	72794727	800WQ0A076	FELT,SHEET
103	72783342	7G7520022A	SHIELD,BOTTOM ASS'Y
104	72783343	7230008077	FILM,DECORATION
105	72795687	741WUA0021	SPRING EARTH
106	72783344	7225490226	SHEET,RATING
107	72794734	899HV3T000	HOLDER ANODE WIRE
108	72783345	800WR00079	SHEET,SILICONE
109	72798684	762WPA0011	HOLDER CRT WIRE
110	72783346	7260000360	SHEET,CRT SERVICEMAN
111	72799964	769WSAA009	WASHER CRT T=1
112	72794733	801WR00001	DAMPER SPEAKER
113	72783347	761WPA0424	HOLDER,JACK
114	72783348	706WPA0015	COVER,CONNECTOR
115	72798661	761WPA0220	HOLDER SPEAKER
116	72795058	890DL20000	DOOR LATCHES(DL2)
117	72783349	792WHA0639	PACKAGE,TOP
118	72783350	792WHA0642	PACKAGE,BOTTOM
119	72783351	793WCD1725	GIFT,BOX
120	72782503	791WHAA138	LIGHTRON SHEET
121	72781629	JA4ND300	POLYBAG INSTRUCTION(RED CAUTION)
122	72783352	J3W20221A	INSTRUCTION BOOK(E/S)
123	72781569	J3N51617A	REGISTRATION CARD
124	72795066	795WCA0665	PAD 378*1114
125	72794741	791WHAA116	FILM,BAG
126	72783354	7230008115	SHEET,BARCODE
127	72783355	A3W2020975	INSTRUCTION BOOK KIT
128	72783661	J3W20299A	CORRECTION SHEET
201	72798790	811063080U	SCREW TAP TITE(P) BRAZIER 3*8 CH
202	72798791	8110630A0U	SCREW TAP TITE(P) BRAZIER 3*10 CH
203	72798786	810763080U	SCREW TAP TITE(S) BRAZIER 3*8 CH
204	72798789	8109I30A0U	SCREW TAP TITE(B) WH7 3*10 CH
205	72781251	810963080Q	SCREW TAP TITE(B) BRAZIER 3*8 STAINLESS
206	72781275	811714080U	SCREW TAPPING(B) PAN 4*8 CH
207	72798795	8117540B0U	SCREW TAP TITE(B0) TRUSS 4*20 CH
208	72781289	8141J60D5U	SCREW,TAP TITE(P) GW18 6*45 CH HEXAGON
209	72781295	8162540A6U	SCREW TAPPING (BO) WASHER 18

ELECTRICAL REPLACEMENT PARTS LIST

Location No.	TSB P/N	Reference No.	Description	
			RESISTORS	
⚠R002	72794621	R3X28B010J	R,METAL OXIDE	1 OHM 3W
⚠R004	72794621	R3X28B010J	R,METAL OXIDE	1 OHM 3W
⚠R007	72794621	R3X28B010J	R,METAL OXIDE	1 OHM 3W
⚠R408	72794614	R65582010J	R,FUSE	1 OHM 1/2W
⚠R410	72795112	R3X18A181J	R,METAL OXIDE	180 OHM 2W
⚠R411	72798042	R6558A5R6J	R,FUSE	5.6 OHM 2W
⚠R416	72797795	R002T23R3J	RC	3.3 OHM 1/2W
⚠R420	72797795	R002T23R3J	RC	3.3 OHM 1/2W
⚠R421	72797878	R3X18A271J	R,METAL OXIDE	270 OHM 2W
⚠R426	72795997	R4X5T6272F	R,METAL	2.7K OHM 1/6W
⚠R434	72783393	R5X2CF100J	R,CEMENT	10 OHM 10W
⚠R436	72781717	R4K1T4183F	R,METAL	18K OHM 1/4W
⚠R438	72797928	R3X28B3R9J	R,METAL	3.9 OHM 3W
⚠R439	72796031	R3K181102J	R,METAL OXIDE	1K OHM 1W
⚠R441	72783394	R4K1T4153F	R,METAL	15K OHM 1/4W
⚠R452	72796046	R3X18A101J	R,METAL OXIDE	100 OHM 2W
⚠R459	72795518	R655822R2J	R,FUSE	2.2 OHM 1/2W
⚠R500	72794631	R0G3K2275K	RC	2.7M OHM 1/2W
⚠R501	72795523	R5X2AE010J	R,CEMENT	1 OHM 7W
⚠R502	72781694	R3K58A331J	R,METAL OXIDE	330 OHM 2W
⚠R506	72794616	R002T4682J	RC	6.8K OHM 1/4W
⚠R520	72795500	R002T2155J	RC	1.5M OHM 1/2W
⚠R522	72783395	R65582330J	R,FUSE	33 OHM 1/2W
⚠R527	72794624	R3X18AR68J	R,METAL OXIDE	0.68 OHM 2W
⚠R531	72794640	R3X28B5R6J	R,METAL OXIDE	5.6 OHM 3W
⚠R542	72796436	R3X181R18J	R,METAL OXIDE	0.18 OHM 1W
⚠R603	72797884	R3X18A560J	R,METAL OXIDE	56 OHM 2W
⚠R650	72783396	R3X28B8R2J	R,METAL OXIDE	8.2 OHM 3W
⚠R651	72783396	R3X28B8R2J	R,METAL OXIDE	8.2 OHM 3W
⚠R804	72796459	R3X18A153J	R,METAL OXIDE	15K OHM 2W
⚠R806	72796459	R3X18A153J	R,METAL OXIDE	15K OHM 2W
⚠R808	72796459	R3X18A153J	R,METAL OXIDE	15K OHM 2W
⚠R855	72794663	R65582331J	R,FUSE	330 OHM 1/2W
⚠R881	72794683	R3X18A221J	R,METAL OXIDE	220 OHM 2W
			CAPACITORS	
C005	72797374	E02LF1222M	CE	2200 UF 10V
C009	72795798	CQGTCH4H2J	CC	220 PF 50V CH
C014	72795798	CQGTCH4H2J	CC	220 PF 50V CH
⚠C408	72794381	E5EZF3222M	CE	2200 UF 25V
⚠C412	72797721	P4N8FK182H	CMPP	0.0018UF 1.5KV
⚠C413	72783360	E0EL04102M	CE	1000 UF 35V
⚠C418	72782052	P4J7F3364J	CMPP	0.36 UF 250V PMS
⚠C420	72797719	P4N8FK133H	CMPP	0.013 UF 1.5KV
⚠C421	72795102	P3N1F5183J	CPP	0.018 UF 630V
C425	72794393	C03L0R713K	CC	0.001 UF 2KV R
⚠C426	72794394	E5EZFD220M	CE	22 UF 250V
⚠C430	72794396	E02LU8220M	CE	22 UF 100V
⚠C432	72797508	E62DFB470M	CE	47 UF 160V
C442	72794397	E736F56R8M	CE	6.8 UF 50V
⚠C501	72797477	E5EZF2222M	CE	2200 UF 16V
⚠C502	72794393	C03L0R713K	CC	0.001 UF 2KV R
⚠C503	72794393	C03L0R713K	CC	0.001 UF 2KV R
⚠C504	72794379	E02LU5220M	CE	22 UF 50V
⚠C505	72794401	P2122B334M	CMP	0.33 UF 275V ECQUL
⚠C506	72795566	P2122B224M	CMP	0.22 UF 275V ECQUL
⚠C507	72794402	E51DFC821M	CE	820 UF 200V
⚠C508	72796318	CC3LE0MH3M	CC	0.0022UF 250V
⚠C513	72796319	CC3LE0M13M	CC	0.001 UF 250V
⚠C514	72781398	E61FT2681D	CE	680 UF 16V
⚠C517	72797086	C03L0R7K3K	CC	0.0027UF 2KV R
⚠C519	72796319	CC3LE0M13M	CC	0.001 UF 250V
⚠C521	72794411	E62NFC221M	CE	220 UF 200V
⚠C527	72796330	E02LF2222M	CE	2200 UF 16V
C528	72783361	E61F90222D	CE	2200 UF 6.3V
C533	72797142	CHGTB0413J	CC	0.001 UF 50V B
C535	72794393	C03L0R713K	CC	0.001 UF 2KV R
C537	72795798	CQGTCH4H2J	CC	220 PF 50V CH
C542	72795847	E02LT0102M	CE	1000 UF 6.3V
C651	72797370	E02L05220M	CE	22 UF 50V
C808	72794440	C0JBB07H3K	CC	0.0022UF 2KV B
C1011	72795575	E02L02222M	CE	2200 UF 16V
			DIODES	
D003	72795626	D2WXN40050	DIODE,SILICON	1N4005-EIC
D103	72783213	D9WU03R92B	DIODE,ZENER	MTZJ3.9B-EIC
D104	72794491	D1VT001330	DIODE,SILICON	1SS133T-77

ELECTRICAL REPLACEMENT PARTS LIST

Location No.	TSB P/N	Reference No.	Description	
			DIODES	
D105	72783213	D9WU03R92B	DIODE,ZENER	MTZJ3.9B-EIC
D106	72783214	D9WU05R62B	DIODE,ZENER	MTZJ5.6B-EIC
D109	72795529	0021721150	LED	SLR-342VCT32
D110	72795627	D2WXSB1400	DIODE,SCHOTTKY	SB140-EIC
D111	72795627	D2WXSB1400	DIODE,SCHOTTKY	SB140-EIC
D112	72783214	D9WU05R62B	DIODE,ZENER	MTZJ5.6B-EIC
D113	72783214	D9WU05R62B	DIODE,ZENER	MTZJ5.6B-EIC
D114	72783214	D9WU05R62B	DIODE,ZENER	MTZJ5.6B-EIC
D401	72783209	D2MXN40020	DIODE,FAST RECOVERY	1N4002-PAN
D402	72783209	D2MXN40020	DIODE,FAST RECOVERY	1N4002-PAN
D403	72781366	D9WU03302B	DIODE,ZENER	MTZJ33B-EIC
D404	72781368	D9WU05R12B	DIODE,ZENER	MTZJ5.1B-EIC
⚠D405	72794472	D2WTAU02A0	DIODE,SILICON	AU02A-EIC
⚠D406	72781367	D9WU03R32B	DIODE,ZENER	MTZJ3.3B-EIC
⚠D407	72794472	D2WTAU02A0	DIODE,SILICON	AU02A-EIC
⚠D408	72794470	D2CF0715L0	DIODE,SILICON	ERD07-15L50
⚠D409	72794475	D2CF2016L0	DIODE,SILICON	FE201-6L49
D410	72781366	D9WU03302B	DIODE,ZENER	MTZJ33B-EIC
⚠D411	72794472	D2WTAU02A0	DIODE,SILICON	AU02A-EIC
⚠D412	72795626	D2WXN40050	DIODE,SILICON	1N4005-EIC
D414	72783209	D2MXN40020	DIODE,FAST RECOVERY	1N4002-PAN
D415	72783209	D2MXN40020	DIODE,FAST RECOVERY	1N4002-PAN
D416	72794488	D2WT011E10	DIODE,SILICON	11E1-EIC
⚠D501	72794473	D2WTRM11C0	DIODE,SILICON	RM11C-EIC
⚠D502	72794473	D2WTRM11C0	DIODE,SILICON	RM11C-EIC
⚠D503	72794473	D2WTRM11C0	DIODE,SILICON	RM11C-EIC
⚠D504	72794473	D2WTRM11C0	DIODE,SILICON	RM11C-EIC
⚠D505	72794480	D28T21DQN9	DIODE,SCHOTTKY	21DQ09N-TA2B1
⚠D506	72795543	D2MXN49370	DIODE,FAST RECOVERY	1N4937-PAN
D507	72794491	D1VT001330	DIODE,SILICON	1SS133T-77
D508	72783213	D9WU03R92B	DIODE,ZENER	MTZJ3.9B-EIC
D509	72783366	D9WU01502B	DIODE,ZENER	MTZJ15B-EIC
⚠D510	72794475	D2CF2016L0	DIODE,SILICON	FE201-6L49
⚠D511	72795543	D2MXN49370	DIODE,FAST RECOVERY	1N4937-PAN
⚠D512	72794480	D28T21DQN9	DIODE,SCHOTTKY	21DQ09N-TA2B1
D513	72794491	D1VT001330	DIODE,SILICON	1SS133T-77
D514	72794491	D1VT001330	DIODE,SILICON	1SS133T-77
D515	72794491	D1VT001330	DIODE,SILICON	1SS133T-77
D516	72794491	D1VT001330	DIODE,SILICON	1SS133T-77
D517	72795543	D2MXN49370	DIODE,FAST RECOVERY	1N4937-PAN
D519	72794491	D1VT001330	DIODE,SILICON	1SS133T-77
D520	72794491	D1VT001330	DIODE,SILICON	1SS133T-77
D521	72781367	D9WU03R32B	DIODE,ZENER	MTZJ3.3B-EIC
⚠D522	72794484	DOU002720M	DIODE,VARISTA	DSS-272M-S00B
⚠D523	72783211	D9WU01802B	DIODE,ZENER	MTZJ18B-EIC
D524	72794491	D1VT001330	DIODE,SILICON	1SS133T-77
D525	72783214	D9WU05R62B	DIODE,ZENER	MTZJ5.6B-EIC
⚠D526	72795544	D6E027110A	DIODE,VARISTA	ENE271D-10A
D527	72797313	D6CE24110A	DIODE,VARISTA	ENE241D-10A-Q6
D528	72783214	D9WU05R62B	DIODE,ZENER	MTZJ5.6B-EIC
⚠D529	72794480	D28T21DQN9	DIODE,SCHOTTKY	21DQ09N-TA2B1
D530	72783210	D9WU01002B	DIODE,ZENER	MTZJ10B-EIC
D531	72781366	D9WU03302B	DIODE,ZENER	MTZJ33B-EIC
D532	72781364	D9WU01202B	DIODE,ZENER	MTZJ12B-EIC
D533	72794491	D1VT001330	DIODE,SILICON	1SS133T-77
⚠D534	72781353	D27A85T400	DIODE,SCHOTTKY	RB085T-40
D535	72783367	D9WU04R72B	DIODE,ZENER	MTZJ4.7B-EIC
D537	72783212	D9WU02R22B	DIODE,ZENER	MTZJ2.2B-EIC
⚠D538	72783368	D28F21DQN9	DIODE,SCHOTTKY	21DQ09N-FC4
D539	72794491	D1VT001330	DIODE,SILICON	1SS133T-77
D604	72783214	D9WU05R62B	DIODE,ZENER	MTZJ5.6B-EIC
D611	72794491	D1VT001330	DIODE,SILICON	1SS133T-77
D612	72794491	D1VT001330	DIODE,SILICON	1SS133T-77
D801	72794491	D1VT001330	DIODE,SILICON	1SS133T-77
D802	72794491	D1VT001330	DIODE,SILICON	1SS133T-77
D803	72794491	D1VT001330	DIODE,SILICON	1SS133T-77
D807	72795087	D28TEQS040	DIODE,SCHOTTKY	11EQS04TA1B2
D808	72795087	D28TEQS040	DIODE,SCHOTTKY	11EQS04TA1B2
D809	72795087	D28TEQS040	DIODE,SCHOTTKY	11EQS04TA1B2
D852	72794491	D1VT001330	DIODE,SILICON	1SS133T-77
D853	72794491	D1VT001330	DIODE,SILICON	1SS133T-77
D854	72794491	D1VT001330	DIODE,SILICON	1SS133T-77
D855	72794491	D1VT001330	DIODE,SILICON	1SS133T-77
D856	72794491	D1VT001330	DIODE,SILICON	1SS133T-77
D857	72796388	D28T0ERB20	DIODE,RECTIFIER	10ERB20-TA1B2

ELECTRICAL REPLACEMENT PARTS LIST

Location No.	TSB P/N	Reference No.	Description	
			DIODES	
D858	72796388	D28T0ERB20	DIODE,RECTIFIER	10ERB20-TA1B2
			ICS	
IC001	72783369	I55J07W660	IC	TC7W66FU(TE12L,F)
⚠IC002	72781440	I07F0C0WF0	IC	BA00BC0WFP-E2
⚠IC003	72781440	I07F0C0WF0	IC	BA00BC0WFP-E2
⚠IC004	72783370	I0GA9VK020	IC	PQ070VK02FZH
⚠IC005	72783370	I0GA9VK020	IC	PQ070VK02FZH
IC101	72783371	S3W202YM01	MEMORY DATA	OEC7144A
IC102	72795101	I9UF032290	IC	PST3229NR
IC199	72783372	S3W202YE01	MEMORY DATA	AT24C128N-10SU-1.8
IC301	72783378	I5AFF11730	IC	NJW1173V(TE1)
⚠IC401	72783379	I03SD78470	IC	LA7847-E
⚠IC504	72794512	000220002W	PHOTO COUPLER	PS2561AL1-1-V(W)
IC601	72783380	I03FC6327A	IC	LA76327M-A-MPB-E
IC701	72783381	I0QF027500	IC	NJM2750M(TE1)
⚠IC1001	72795536	I0FSP7822A	IC	AN17822A
IC1501	72797544	I03FE76605	IC	LA76605M-TLM-E
IC2401	72783373	ICQK039640	IC	ZR39640BGCG-B1
IC2402	72783374	IFYK002200	IC	CAS-220/CS
IC2404	72783375	ICLJ022DT5	IC	HY5DU561622DTP-D43
IC2408	72783376	S3W202YF01	MEMORY DATA	SST39VF1681-70-4C-EKE
IC2501	72783377	I1FF043450	IC	CS4345-CZZ
IC2502	72797569	I0QF0580V0	IC	NJM4580V(TE1)
			TRANSISTORS	
Q002	72795962	TNAAB05003	COMPOUND TRANSISTOR	KRC102SRTK
Q003	72798324	TAAT012714	TRANSISTOR,SILICON	KTA1271_Y-AT
Q004	72794567	TNAAC05002	COMPOUND TRANSISTOR	KRC103SRTK
Q005	72783390	T82A03841Q	TRANSISTOR,SILICON	2SC3841-T1B_T63
Q006	72783390	T82A03841Q	TRANSISTOR,SILICON	2SC3841-T1B_T63
Q007	72783390	T82A03841Q	TRANSISTOR,SILICON	2SC3841-T1B_T63
Q009	72795963	TPAAB05001	COMPOUND TRANSISTOR	KRA102SRTK
Q010	72794567	TNAAC05002	COMPOUND TRANSISTOR	KRC103SRTK
Q101	72795481	T6RA015300	TRANSISTOR,SILICON	2SA1530A-T1
Q102	72795481	T6RA015300	TRANSISTOR,SILICON	2SA1530A-T1
Q103	72795479	T8RA030520	TRANSISTOR,SILICON	2SC3052-T1
Q104	72794570	TCAT03209Y	TRANSISTOR,SILICON	KTC3209_Y-AT
Q105	72796429	TNRAC05003	COMPOUND TRANSISTOR	RT1N241C-T112-1
Q106	72795481	T6RA015300	TRANSISTOR,SILICON	2SA1530A-T1
Q107	72795481	T6RA015300	TRANSISTOR,SILICON	2SA1530A-T1
⚠Q402	72794561	TCAT03227Y	TRANSISTOR,SILICON	KTC3227_Y-AT
⚠Q405	72794562	TD50026380	TRANSISTOR,SILICON	2SD2638(OEC)
⚠Q501	72795476	TCAT032034	TRANSISTOR,SILICON	KTC3203_Y-AT
⚠Q502	72783392	TJXG10NK50	FET	STF10NK50Z
⚠Q503	72795475	TA3T1371A0	TRANSISTOR,SILICON	2SA1371(D,E)-AE
Q504	72794577	TCATC31980	TRANSISTOR,SILICON	KTC3198-AT(Y,GR)
⚠Q505	72795474	TC3T029090	TRANSISTOR,SILICON	2SC2909(S,T)-AA
Q506	72781803	TNRAD05002	COMPOUND TRANSISTOR	RT1N441C-T112-1
⚠Q507	72794577	TCATC31980	TRANSISTOR,SILICON	KTC3198-AT(Y,GR)
⚠Q508	72798324	TAAT012714	TRANSISTOR,SILICON	KTA1271_Y-AT
Q509	72794577	TCATC31980	TRANSISTOR,SILICON	KTC3198-AT(Y,GR)
Q510	72781803	TNRAD05002	COMPOUND TRANSISTOR	RT1N441C-T112-1
⚠Q511	72795481	T6RA015300	TRANSISTOR,SILICON	2SA1530A-T1
⚠Q512	72794569	TA3T016240	TRANSISTOR,SILICON	2SA1624-AA
Q513	72795479	T8RA030520	TRANSISTOR,SILICON	2SC3052-T1
⚠Q514	72795476	TCAT032034	TRANSISTOR,SILICON	KTC3203_Y-AT
Q601	72796427	TNRAB05004	COMPOUND TRANSISTOR	RT1N141C-T112-1
Q602	72794570	TCAT03209Y	TRANSISTOR,SILICON	KTC3209_Y-AT
Q603	72794578	TAATA12660	TRANSISTOR,SILICON	KTA1266-AT(Y,GR)
Q604	72795479	T8RA030520	TRANSISTOR,SILICON	2SC3052-T1
Q605	72796425	TPRAB05002	COMPOUND TRANSISTOR	RT1P141C-T112-1
Q606	72794570	TCAT03209Y	TRANSISTOR,SILICON	KTC3209_Y-AT
Q607	72794570	TCAT03209Y	TRANSISTOR,SILICON	KTC3209_Y-AT
Q608	72794570	TCAT03209Y	TRANSISTOR,SILICON	KTC3209_Y-AT
Q609	72794570	TCAT03209Y	TRANSISTOR,SILICON	KTC3209_Y-AT
Q610	72795479	T8RA030520	TRANSISTOR,SILICON	2SC3052-T1
⚠Q611	72794570	TCAT03209Y	TRANSISTOR,SILICON	KTC3209_Y-AT
Q612	72795479	T8RA030520	TRANSISTOR,SILICON	2SC3052-T1
Q701	72795479	T8RA030520	TRANSISTOR,SILICON	2SC3052-T1
⚠Q801	72794574	TCA0042170	TRANSISTOR,SILICON	KTC4217(O,Y)
⚠Q802	72794574	TCA0042170	TRANSISTOR,SILICON	KTC4217(O,Y)
⚠Q803	72794574	TCA0042170	TRANSISTOR,SILICON	KTC4217(O,Y)
⚠Q810	72794573	TCATC3199Y	TRANSISTOR,SILICON	KTC3199_Y-AT
⚠Q811	72794573	TCATC3199Y	TRANSISTOR,SILICON	KTC3199_Y-AT
⚠Q812	72794573	TCATC3199Y	TRANSISTOR,SILICON	KTC3199_Y-AT
Q852	72794577	TCATC31980	TRANSISTOR,SILICON	KTC3198-AT(Y,GR)

ELECTRICAL REPLACEMENT PARTS LIST

Location No.	TSB P/N	Reference No.	Description	
			TRANSISTORS	
Q853	72794575	TCUT00752Y	TRANSISTOR,SILICON	2SC752(G)(TM)_Y
Q854	72794577	TCATC31980	TRANSISTOR,SILICON	KTC3198-AT(Y,GR)
Q855	72794577	TCATC31980	TRANSISTOR,SILICON	KTC3198-AT(Y,GR)
Q856	72794577	TCATC31980	TRANSISTOR,SILICON	KTC3198-AT(Y,GR)
Q857	72794578	TAATA12660	TRANSISTOR,SILICON	KTA1266-AT(Y,GR)
Q858	72794579	TA10021400	TRANSISTOR,SILICON	2SA2140
Q859	72794580	TC10059930	TRANSISTOR,SILICON	2SC5993
Q1001	72795479	T8RA030520	TRANSISTOR,SILICON	2SC3052-T1
Q1503	72795479	T8RA030520	TRANSISTOR,SILICON	2SC3052-T1
Q1507	72795479	T8RA030520	TRANSISTOR,SILICON	2SC3052-T1
Q1508	72795479	T8RA030520	TRANSISTOR,SILICON	2SC3052-T1
Q2401	72783391	TCAA040754	TRANSISTOR,SILICON	KTC4075E-Y-RTK/P
Q2402	72783391	TCAA040754	TRANSISTOR,SILICON	KTC4075E-Y-RTK/P
			COILS &TRANSFORMERS	
L001	72794526	02167F220J	COIL	22 UH
L003	72794540	02167F101J	COIL	100 UH
L004	72794526	02167F220J	COIL	22 UH
L301	72794526	02167F220J	COIL	22 UH
L402	72782055	022K00051A	COIL,LINEARITY	311015011
⚠L403	72794529	02DK000058	COIL CHOKE	02DK000058
⚠L501	72796639	029X000098	COIL,LINE FILTER	SS28H-20075
L502	72796513	02167E220K	COIL	22 UH
⚠L503	72783288	028R270019	COIL,DEGAUSS	8R270019
L601	72794540	02167F101J	COIL	100 UH
L602	72796407	02167D101K	COIL	100 UH
L801	72796492	021673101J	COIL	100 UH
L802	72795931	021673151K	COIL	150 UH
L803	72795931	021673151K	COIL	150 UH
L804	72795931	021673151K	COIL	150 UH
L1505	72795932	02167F150J	COIL	15 UH
L1510	72795932	02167F150J	COIL	15 UH
L1511	72795932	02167F150J	COIL	15 UH
L1512	72796571	021LA6220J	COIL	22 UH
L2402	72783383	021AS9224J	COIL	0.22 UH
L2404	72783384	0216SDR47J	COIL	0.47 UH
L2405	72783384	0216SDR47J	COIL	0.47 UH
T401	72794690	0450190171	TRANS,HORIZONTAL DRIVE	ETH19Y206AY
⚠T501	72783397	0481400794	TRANSFORMER,SWITCHING	81400794
			JACKS	
J701	72794518	060J431020	RCA JACK	MSP-213V2-432_NI_LF
J702	72799005	063D700010	JACK	MDC-012V1-A_LF
J703	72783382	060J411045	RCA JACK	MSP-382V-12_NI_FE_LF
J704	72795493	060J411032	RCA JACK	MSP-213V1-652_NI_LF
J705	72794519	060J401104	RCA JACK	MTJ-032-03A-30FE
J706	72794520	060J401106	RCA JACK	MTJ-032-03A-32FE
J707	72794521	060J401105	RCA JACK	MTJ-032-03A-31FE
J708	72798996	060J431022	RCA JACK	MSP-213V2-732_NI_LF
⚠J801	72799008	066C130024	SOCKET,CATHODE RAY TUBE	CVT3205-5101FSZ
			SWITCHES	
SW101	72794688	0504101T34	SWITCH,TACT	EVQ21505R
SW102	72794688	0504101T34	SWITCH,TACT	EVQ21505R
SW103	72794688	0504101T34	SWITCH,TACT	EVQ21505R
SW104	72794688	0504101T34	SWITCH,TACT	EVQ21505R
SW105	72794688	0504101T34	SWITCH,TACT	EVQ21505R
			VARIABLE RESISTORS	
VR401	72795471	V1K63H3BTE	VOLUME,SEMI FIXED	NVG6TLTAB222
VR502	72794701	V1163H4BTC	VOLUME,SEMI FIXED	EVNCYAA03BE4
			P.C.BOARD ASSEMBLIES	
PCB070	72783386	A3W202Y070	PCB ASS'Y	CME077A
PCB110	72783387	A3W202Y110	PCB ASS'Y	CCD014A
PCBD80	72783388	A3W202YD80	PCB ASS'Y	CED037A
PCBDH0	72783389	A3W202YDH0	PCB ASS'Y	CEE139B
			MISCELLANEOUS	
B001	72783356	024HC51023	CORE,BEADS	FCM1608KF-102T02
B101	72794357	024HT03553	CORE,BEADS	W5RH3.5X5X1.0
B102	72794357	024HT03553	CORE,BEADS	W5RH3.5X5X1.0
B401	72794356	024HT03564	CORE,BEADS	W4BRH3.5X6X1.0
B402	72794356	024HT03564	CORE,BEADS	W4BRH3.5X6X1.0
B405	72794356	024HT03564	CORE,BEADS	W4BRH3.5X6X1.0
⚠B501	72794355	024HT03563	CORE,BEADS	W4BRH3.5X6X1.0X2
B502	72794357	024HT03553	CORE,BEADS	W5RH3.5X5X1.0
⚠B504	72794357	024HT03553	CORE,BEADS	W5RH3.5X5X1.0
B701	72783359	024HC56005	CORE,BEADS	FCM1608CF-600T06
B702	72783359	024HC56005	CORE,BEADS	FCM1608CF-600T06
B851	72794357	024HT03553	CORE,BEADS	W5RH3.5X5X1.0

ELECTRICAL REPLACEMENT PARTS LIST

Location No.	TSB P/N	Reference No.	Description	
			MISCELLANEOUS	
B852	72794357	024HT03553	CORE,BEADS	W5RH3.5X5X1.0
B853	72794357	024HT03553	CORE,BEADS	W5RH3.5X5X1.0
B1501	72783356	024HC51023	CORE,BEADS	FCM1608KF-102T02
B1502	72783356	024HC51023	CORE,BEADS	FCM1608KF-102T02
B2402	72783357	024HC51513	CORE,BEADS	FCM1608KF-151T06
B2403	72783357	024HC51513	CORE,BEADS	FCM1608KF-151T06
B2404	72783357	024HC51513	CORE,BEADS	FCM1608KF-151T06
B2405	72783357	024HC51513	CORE,BEADS	FCM1608KF-151T06
B2406	72783356	024HC51023	CORE,BEADS	FCM1608KF-102T02
B2407	72783357	024HC51513	CORE,BEADS	FCM1608KF-151T06
B2408	72783357	024HC51513	CORE,BEADS	FCM1608KF-151T06
B2409	72783357	024HC51513	CORE,BEADS	FCM1608KF-151T06
B2410	72783357	024HC51513	CORE,BEADS	FCM1608KF-151T06
B2411	72783356	024HC51023	CORE,BEADS	FCM1608KF-102T02
B2412	72783356	024HC51023	CORE,BEADS	FCM1608KF-102T02
B2413	72783356	024HC51023	CORE,BEADS	FCM1608KF-102T02
B2414	72783356	024HC51023	CORE,BEADS	FCM1608KF-102T02
B2415	72783356	024HC51023	CORE,BEADS	FCM1608KF-102T02
B2416	72783356	024HC51023	CORE,BEADS	FCM1608KF-102T02
B2417	72783356	024HC51023	CORE,BEADS	FCM1608KF-102T02
B2418	72783356	024HC51023	CORE,BEADS	FCM1608KF-102T02
B2419	72783357	024HC51513	CORE,BEADS	FCM1608KF-151T06
B2420	72783356	024HC51023	CORE,BEADS	FCM1608KF-102T02
B2421	72783357	024HC51513	CORE,BEADS	FCM1608KF-151T06
B2423	72783356	024HC51023	CORE,BEADS	FCM1608KF-102T02
B2501	72783356	024HC51023	CORE,BEADS	FCM1608KF-102T02
B3402	72783358	024HC16014	CORE,BEADS	HCB3216KF-601T20
B3403	72783357	024HC51513	CORE,BEADS	FCM1608KF-151T06
B3404	72783358	024HC16014	CORE,BEADS	HCB3216KF-601T20
B3405	72783358	024HC16014	CORE,BEADS	HCB3216KF-601T20
BT001	72783174	141U004016	BATTERY,MANGAN	MNAAA(R03)
BT002	72783174	141U004016	BATTERY,MANGAN	MNAAA(R03)
⚠CD501	72795554	1209414909	CORD,AC BUSH	9414909
CD801	72796887	06CU253901	CORD,CONNECTOR	CU253901
CD803	72783363	06CH83038A	CORD,CONNECTOR	CH83038A
CD851	72796883	06CU244701	CORD,CONNECTOR	CU244701
CD852	72794464	06CU232001	CORD,CONNECTOR	CU232001
CP101	72783364	069S280639	CONNECTOR PCB SIDE	A2001WR2-8P
CP102	72796801	069S270629	CONNECTOR PCB SIDE	A2001WV2-7P
⚠CP401	72782003	069X460109	CONNECTOR PCB SIDE	B06B-DVS-L_(LF)
⚠CP502	72796821	069S420110	CONNECTOR PCB SIDE	A1561WV2-2P
CP507	72796768	069D01001A	CONNECTOR PCB SIDE	003P-2100
CP508	72796768	069D01001A	CONNECTOR PCB SIDE	003P-2100
CP803	72796818	069S330010	CONNECTOR PCB SIDE	A2361WV2-3P
CP804	72796824	069W010010	CONNECTOR PCB SIDE	005P-2100
CP852	72796794	069S230629	CONNECTOR PCB SIDE	A2001WV2-3P
CD1001	72783362	06CU14A006	CORD,CONNECTOR	CU14A006
CP1001	72796793	069S140419	CONNECTOR PCB SIDE	A2502WV2-4P
CP2403	72799043	069R2Y0700	CONNECTOR PCB SIDE	87760-3416
CP801A	72796751	067U005049	WIRE HOLDER	B2013H02-5P
CP801B	72796798	069S250629	CONNECTOR PCB SIDE	A2001WV2-5P
CP802A	72783365	06CU275201	CORD,CONNECTOR	CU275201
CP802B	72796801	069S270629	CONNECTOR PCB SIDE	A2001WV2-7P
CP851A	72796750	067U004029	WIRE HOLDER	B2013H02-4P
CP851B	72796796	069S240629	CONNECTOR PCB SIDE	A2001WV2-4P
CP852B	72796749	067U003029	WIRE HOLDER	B2013H02-3P
EL0701	72797069	124116281A	EYE LET	XRY16X28BD
EL0702	72797070	124120301A	EYE LET	XRY20X30BD
⚠F501	72794493	081PC6R305	FUSE	51MS063L
⚠F502	72796952	0835A07005	MICRO FUSE	20N_7000FSW
⚠FB401	72796673	043227017F	TRANSFORMER,FLYBACK	FSU27A004_M
FH501	72794496	06710T0009	HOLDER,FUSE	EYF-52BCY
FH502	72794496	06710T0009	HOLDER,FUSE	EYF-52BCY
NR2402	72783385	110P4220M6	R,NETWORK	4D02WGJ0220TCE
NR2403	72783385	110P4220M6	R,NETWORK	4D02WGJ0220TCE
NR2404	72783385	110P4220M6	R,NETWORK	4D02WGJ0220TCE
NR2405	72783385	110P4220M6	R,NETWORK	4D02WGJ0220TCE
NR2406	72783385	110P4220M6	R,NETWORK	4D02WGJ0220TCE
NR2407	72783385	110P4220M6	R,NETWORK	4D02WGJ0220TCE
NR2408	72783385	110P4220M6	R,NETWORK	4D02WGJ0220TCE
NR2409	72783385	110P4220M6	R,NETWORK	4D02WGJ0220TCE
NR2410	72783385	110P4220M6	R,NETWORK	4D02WGJ0220TCE
NR2411	72783385	110P4220M6	R,NETWORK	4D02WGJ0220TCE
OS101	72794541	0773071001	REMOTE RECEIVER	RPM7138-WH5
⚠RY501	72798987	0560V20119	RELAY	ALKS321_M60

ELECTRICAL REPLACEMENT PARTS LIST

Location No.	TSB P/N	Reference No.	Description	
			SWITCHES	
⚠SP1001	72794687	070W457007	SPEAKER	MSF-2D5D10W
⚠SP1002	72794687	070W457007	SPEAKER	MSF-2D5D10W
⚠TH501	72795546	DF5EL3R0A0	DEGAUSS ELEMENT	ZPB45BL3R0A
TM101	72799186	076D0KK010	TRANSMITTER	ORT204N7404359-U
⚠TU001	72783398	0164100005	DIGITAL TUNER	ENG36A49KF
⚠V801	72783267	098S270914	CRT W/DY	A68QCU870X66LRND
X103	72799226	100WT01611	CRYSTAL	HC-49/U-S
X601	72794704	100DT3R531	CRYSTAL	HC-49/U
X2401	72783399	100GA02402	CRYSTAL	B24576K010
X2402	72783400	100GA02502	CRYSTAL	B25000H006

RESISTOR

RC..... CARBON RESISTOR

CAPACITORS

CC..... CERAMIC CAPACITOR
CE..... ALUMI ELECTROLYTIC CAPACITOR
CP..... POLYESTER CAPACITOR
CPP..... POLYPROPYLENE CAPACITOR
CPL..... PLASTIC CAPACITOR
CMP..... METAL POLYESTER CAPACITOR
CMPL..... METAL PLASTIC CAPACITOR
CMPP..... METAL POLYPROPYLENE CAPACITOR

TOSHIBA CORPORATION
1-1, SHIBAURA 1-CHOME, MINATO-KU, TOKYO 105-8001, JAPAN